S-SERVO®

Stepping Motor Control System Without Step Out

- **Completely free from the Concern of Loss of Position.**
  (Alarm Generation when Step-Out)
- **Perfect Positioning and Completion.**
  (Positioning Completion Signal Generation)
- **Don't Care what the Phase of Motor is.**
  (Position Accuracy only Related to Encoder Resolution)
- **Reduce the Motor Temperature and Energy Usage.**
  (Current Control According to load)
- **Torque Improvement by Boost Current Control.**
  (Max. 150% Current Control)

CE

FASTECH

Fast, Accurate, Smooth Motion

S-SERVO Series Product Line Up

Classification			S-SERVO Series			
			S-SERVO			
			ST	MINI	2X	3X
Product Picture						
Product Specification			● S-SERVO Basic Functions adopted Standard Type of Product	● Compact Size Drive adopted MINI Sizue Product	● Multi-Axes Support Single Drive Board Product Equipped 2 Axes	● Multi-Axes Support Single Drive Board Product Equipped 3 Axes
Applied Motor	20	Standard	O	O	O	O
		Brake	–	–	–	–
		Gearbox	–	–	–	–
	28	Standard	O	O	O	O
		Brake	–	–	–	–
		Gearbox	–	–	–	–
	42	Standard	O	O	O	O
		Brake	O	O	O	O
		Gearbox	O	O	O	O
	56	Standard	O		O	O
		Brake	O		O	O
		Gearbox	O		O	O
	60	Standard	O		O	O
		Brake	O		O	O
		Gearbox	O		O	O

S-SERVO®

Stepping motor control system without step out

S-SERVO adopted closed loop stepping motor system which perfectly resolves the problems of current open loop control stepping motor system such as Step Out and Positioning Completion Check.

Regardless of motor type (2 Phase, 5 Phase), position precision only related to encoder so High Precision Positioning is always possible.

Existing step driver resolution can be heated easily because of constant current goes into the motor regardless of loads magnitude. However S-SERVO enables to reduce high temperature of the motor and save Energy Usage. In addition, the Acc/Dec characteristics can be improved significantly by Boost Current (Up to 150%).

Characteristics

1. Completely Free from the Concern of Loss of Position.

(Alarm will be generated when step out)

Because of mounted encoder constantly monitor the current position, step out cannot be occurred.
If step out occurred by external force of overloads, alarm signal will be sent to upper controller. Thus, upper controller can recognize step out of step motor

2. Perfect Positioning Completion Check

(Positioning completion signal will be generated)

When motor stops at the goal position, encoder detect it and send positioning completion signal to upper controller. Therefore S-SERVO resolve the problem of unclear positioning of current Open Loop System

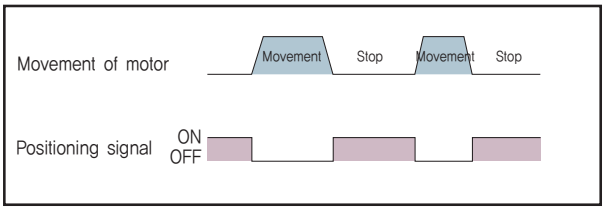

3. Position Precision is Only Related to Encoder

S-SERVO controls position by using high precision of encoder. Regardless of motor type (2 Phase or 5 Phase), S-SERVO position precision is only related to mounted encoder resolution so high precision of positioning is possible unlike open loop micro step motor and driver which adapts 2 Phase or 5 Phase motor.

4. Reduce the Motor Temperature and Energy Usage.

(Current control according to load)

S-SERVO automatically control the motor current according to loads. Thus, febricity of motor and drive are minimized so can save the energy as well.

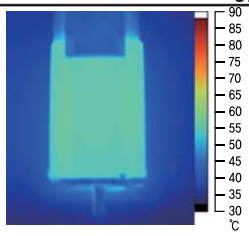

Motor temperature [measured by thermograph]

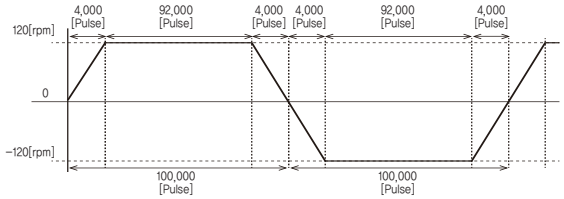

Condition to measure the motor temperature
[4hours operation, Motor surface temperature saturation]

5. Improved acceleration and deceleration characteristics by Boost Current.

by Boost Current Setting of Parameter setting.
It enables acceleration and deceleration characteristics to be improved.

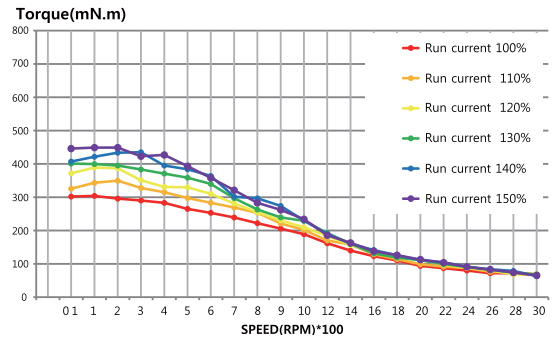

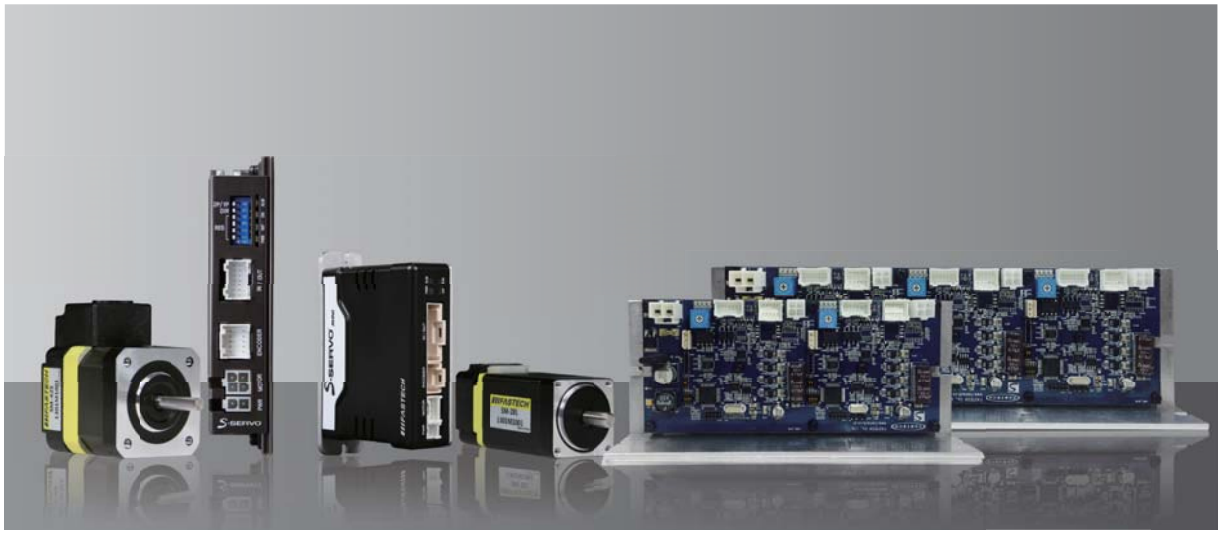

6. Complete Stop

It completely stop when motor stops so hunting cannot be occurred. It is suitable for high speed inspection equipment using vision.

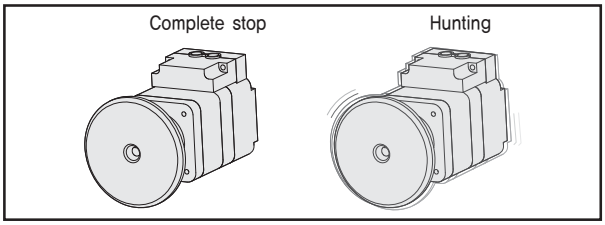

7. High Torque and High Speed

S-SERVO detect current position by encoder feedback so can keep the high torque against the 100% loads and high speed. Current Open Loop System cannot drive against 100% loads because of false operation by step out.

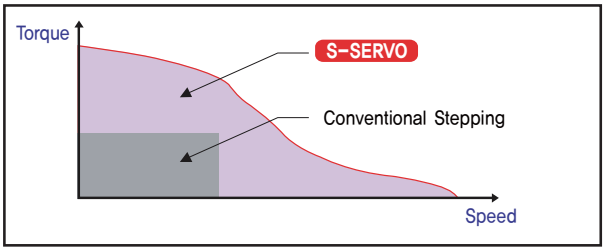

8. Variety of Protection Functions and Alarm Signal.

Drive and equipment can be protected by the alarm (12 kinds) of such as motor connection error, encoder connection error etc.

9. Variety of Position Command Unit

According to the purpose of usage, S-SERVO offer 16 stage (500~50,000P/R) of position command unit.

Common

S-SERVO ST Part Numbering

S-SERVO-ST-42S-PG-PN10

Drive Series

Drive Type

ST : Standard
MI : MINI

Motor Size

20 : 20mm
28 : 28mm
35 : 35mm
42 : 42mm
56 : 56mm
60 : 60mm

Motor Length

S : Single
M : Middle
L : Large
XL: Extra Large

Option

No indication : Standard
BK : Brake Integrated
PG : Gearbox installed

Gearbox Type

No indication : No Gearbox
PN : Precision Grade Gearbox
PS : General Grade Gearbox

Reduction Gear Ratio

No Indication : No Gearbox
Single Stage : 3/5/8/10
Second Stage : 15/25/40/50

※ S-SERVO-2X, S-SERVO-3X product needs 2 or 3 sets of motors for one drive. Combination of drive and motors can be diversifed so please contact with sales division or distributor of Fastech before purchasing product.

Standard Motor, Drive Combination

◆ S-SERVO ST Drive Products

Unit Part Number	Motor Part Number	Drive Part Number
S-SERVO-ST-20M	SM-20M	SV-PD-20M
S-SERVO-ST-20L	SM-20L	SV-PD-20L
S-SERVO-ST-28S	SM-28S	SV-PD-28S
S-SERVO-ST-28M	SM-28M	SV-PD-28M
S-SERVO-ST-28L	SM-28L	SV-PD-28L
S-SERVO-ST-35M	SM-35M	SV-PD-35M
S-SERVO-ST-35L	SM-35L	SV-PD-35L
S-SERVO-ST-42S	SM-42S	SV-PD-42S
S-SERVO-ST-42M	SM-42M	SV-PD-42M
S-SERVO-ST-42L	SM-42L	SV-PD-42L
S-SERVO-ST-42XL	SM-42XL	SV-PD-42XL
S-SERVO-ST-56S	SM-56S	SV-PD-56S
S-SERVO-ST-56M	SM-56M	SV-PD-56M
S-SERVO-ST-56L	SM-56L	SV-PD-56L
S-SERVO-ST-60S	SM-60S	SV-PD-60S
S-SERVO-ST-60M	SM-60M	SV-PD-60M
S-SERVO-ST-60L	SM-60L	SV-PD-60L

◆ S-SERVO MINI Drive Products

Unit Part Number	Motor Part Number	Drive Part Number
S-SERVO-MI-20M	SM-20M	SV-PD-MI-20M
S-SERVO-MI-20L	SM-20L	SV-PD-MI-20L
S-SERVO-MI-28S	SM-28S	SV-PD-MI-28S
S-SERVO-MI-28M	SM-28M	SV-PD-MI-28M
S-SERVO-MI-28L	SM-28L	SV-PD-MI-28L
S-SERVO-MI-35M	SM-35M	SV-PD-MI-35M
S-SERVO-MI-35L	SM-35L	SV-PD-MI-35L
S-SERVO-MI-42S	SM-42S	SV-PD-MI-42S
S-SERVO-MI-42M	SM-42M	SV-PD-MI-42M
S-SERVO-MI-42L	SM-42L	SV-PD-MI-42L
S-SERVO-MI-42XL	SM-42XL	SV-PD-MI-42XL

Brake Integrated Motor, Drive Combination

◆ S-SERVO ST Drive Products

Unit Part Number	Motor Part Number	Drive Part Number
S-SERVO-ST-42S-BK	SM-42S-BK	SV-PD-42S-BK
S-SERVO-ST-42M-BK	SM-42M-BK	SV-PD-42M-BK
S-SERVO-ST-42L-BK	SM-42L-BK	SV-PD-42L-BK
S-SERVO-ST-42XL-BK	SM-42XL-BK	SV-PD-42XL-BK
S-SERVO-ST-56S-BK	SM-56S-BK	SV-PD-56S-BK
S-SERVO-ST-56M-BK	SM-56M-BK	SV-PD-56M-BK
S-SERVO-ST-56L-BK	SM-56L-BK	SV-PD-56L-BK
S-SERVO-ST-60S-BK	SM-60S-BK	SV-PD-60S-BK
S-SERVO-ST-60M-BK	SM-60M-BK	SV-PD-60M-BK
S-SERVO-ST-60L-BK	SM-60L-BK	SV-PD-60L-BK

◆ S-SERVO MINI Drive Products

Unit Part Number	Motor Part Number	Drive Part Number
S-SERVO-MI-42S-BK	SM-42S-BK	SV-PD-MI-42S-BK
S-SERVO-MI-42M-BK	SM-42M-BK	SV-PD-MI-42M-BK
S-SERVO-MI-42L-BK	SM-42L-BK	SV-PD-MI-42L-BK
S-SERVO-MI-42XL-BK	SM-42XL-BK	SV-PD-MI-42XL-BK

Common

Gearbox Integrated Motor, Drive Combination

◆ S-SERVO ST Drive Products

Unit Part Number	Motor Part Number	Drive Part Number	Reduction gear ratio
S-SERVO-ST-42S-PG-PN3	SM-42S-PG-PN3	SV-PD-42S	1:3
S-SERVO-ST-42S-PG-PN5	SM-42S-PG-PN5		1:5
S-SERVO-ST-42S-PG-PN8	SM-42S-PG-PN8		1:8
S-SERVO-ST-42S-PG-PN10	SM-42S-PG-PN10		1:10
S-SERVO-ST-42S-PG-PN15	SM-42S-PG-PN15		1:15
S-SERVO-ST-42S-PG-PN25	SM-42S-PG-PN25		1:25
S-SERVO-ST-42S-PG-PN40	SM-42S-PG-PN40		1:40
S-SERVO-ST-42S-PG-PN50	SM-42S-PG-PN50		1:50
S-SERVO-ST-42M-PG-PN3	SM-42M-PG-PN3	SV-PD-42M	1:3
S-SERVO-ST-42M-PG-PN5	SM-42M-PG-PN5		1:5
S-SERVO-ST-42M-PG-PN8	SM-42M-PG-PN8		1:8
S-SERVO-ST-42M-PG-PN10	SM-42M-PG-PN10		1:10
S-SERVO-ST-42M-PG-PN15	SM-42M-PG-PN15		1:15
S-SERVO-ST-42M-PG-PN25	SM-42M-PG-PN25		1:25
S-SERVO-ST-42M-PG-PN40	SM-42M-PG-PN40		1:40
S-SERVO-ST-42M-PG-PN50	SM-42M-PG-PN50		1:50
S-SERVO-ST-42L-PG-PN3	SM-42L-PG-PN3	SV-PD-42L	1:3
S-SERVO-ST-42L-PG-PN5	SM-42L-PG-PN5		1:5
S-SERVO-ST-42L-PG-PN8	SM-42L-PG-PN8		1:8
S-SERVO-ST-42L-PG-PN10	SM-42L-PG-PN10		1:10
S-SERVO-ST-42L-PG-PN15	SM-42L-PG-PN15		1:15
S-SERVO-ST-42L-PG-PN25	SM-42L-PG-PN25		1:25
S-SERVO-ST-42L-PG-PN40	SM-42L-PG-PN40		1:40
S-SERVO-ST-42L-PG-PN50	SM-42L-PG-PN50		1:50
S-SERVO-ST-42XL-PG-PN3	SM-42XL-PG-PN3	SV-PD-42XL	1:3
S-SERVO-ST-42XL-PG-PN5	SM-42XL-PG-PN5		1:5
S-SERVO-ST-42XL-PG-PN8	SM-42XL-PG-PN8		1:8
S-SERVO-ST-42XL-PG-PN10	SM-42XL-PG-PN10		1:10
S-SERVO-ST-42XL-PG-PN15	SM-42XL-PG-PN15		1:15
S-SERVO-ST-42XL-PG-PN25	SM-42XL-PG-PN25		1:25
S-SERVO-ST-42XL-PG-PN40	SM-42XL-PG-PN40		1:40
S-SERVO-ST-42XL-PG-PN50	SM-42XL-PG-PN50		1:50
S-SERVO-ST-56S-PG-PN3	SM-56S-PG-PN3	SV-PD-56S	1:3
S-SERVO-ST-56S-PG-PN5	SM-56S-PG-PN5		1:5
S-SERVO-ST-56S-PG-PN8	SM-56S-PG-PN8		1:8
S-SERVO-ST-56S-PG-PN10	SM-56S-PG-PN10		1:10
S-SERVO-ST-56S-PG-PN15	SM-56S-PG-PN15		1:15
S-SERVO-ST-56S-PG-PN25	SM-56S-PG-PN25		1:25
S-SERVO-ST-56S-PG-PN40	SM-56S-PG-PN40		1:40
S-SERVO-ST-56S-PG-PN50	SM-56S-PG-PN50		1:50
S-SERVO-ST-56M-PG-PN3	SM-56M-PG-PN3	SV-PD-56M	1:3
S-SERVO-ST-56M-PG-PN5	SM-56M-PG-PN5		1:5
S-SERVO-ST-56M-PG-PN8	SM-56M-PG-PN8		1:8
S-SERVO-ST-56M-PG-PN10	SM-56M-PG-PN10		1:10
S-SERVO-ST-56M-PG-PN15	SM-56M-PG-PN15		1:15
S-SERVO-ST-56M-PG-PN25	SM-56M-PG-PN25		1:25
S-SERVO-ST-56M-PG-PN40	SM-56M-PG-PN40		1:40
S-SERVO-ST-56M-PG-PN50	SM-56M-PG-PN50		1:50
S-SERVO-ST-56L-PG-PN3	SM-56L-PG-PN3	SV-PD-56L	1:3
S-SERVO-ST-56L-PG-PN5	SM-56L-PG-PN5		1:5
S-SERVO-ST-56L-PG-PN8	SM-56L-PG-PN8		1:8
S-SERVO-ST-56L-PG-PN10	SM-56L-PG-PN10		1:10
S-SERVO-ST-56L-PG-PN15	SM-56L-PG-PN15		1:15
S-SERVO-ST-56L-PG-PN25	SM-56L-PG-PN25		1:25
S-SERVO-ST-56L-PG-PN40	SM-56L-PG-PN40		1:40
S-SERVO-ST-56L-PG-PN50	SM-56L-PG-PN50		1:50

Unit Part Number	Motor Part Number	Drive Part Number	Reduction gear ratio
S-SERVO-ST-60S-PG-PN3	SM-60S-PG-PN3	SV-PD-60S	1:3
S-SERVO-ST-60S-PG-PN5	SM-60S-PG-PN5		1:5
S-SERVO-ST-60S-PG-PN8	SM-60S-PG-PN8		1:8
S-SERVO-ST-60S-PG-PN10	SM-60S-PG-PN10		1:10
S-SERVO-ST-60S-PG-PN15	SM-60S-PG-PN15		1:15
S-SERVO-ST-60S-PG-PN25	SM-60S-PG-PN25		1:25
S-SERVO-ST-60S-PG-PN40	SM-60S-PG-PN40		1:40
S-SERVO-ST-60S-PG-PN50	SM-60S-PG-PN50		1:50
S-SERVO-ST-60M-PG-PN3	SM-60M-PG-PN3	SV-PD-60M	1:3
S-SERVO-ST-60M-PG-PN5	SM-60M-PG-PN5		1:5
S-SERVO-ST-60M-PG-PN8	SM-60M-PG-PN8		1:8
S-SERVO-ST-60M-PG-PN10	SM-60M-PG-PN10		1:10
S-SERVO-ST-60M-PG-PN15	SM-60M-PG-PN15		1:15
S-SERVO-ST-60M-PG-PN25	SM-60M-PG-PN25		1:25
S-SERVO-ST-60M-PG-PN40	SM-60M-PG-PN40		1:40
S-SERVO-ST-60M-PG-PN50	SM-60M-PG-PN50		1:50
S-SERVO-ST-60L-PG-PN3	SM-60L-PG-PN3	SV-PD-60L	1:3
S-SERVO-ST-60L-PG-PN5	SM-60L-PG-PN5		1:5
S-SERVO-ST-60L-PG-PN8	SM-60L-PG-PN8		1:8
S-SERVO-ST-60L-PG-PN10	SM-60L-PG-PN10		1:10
S-SERVO-ST-60L-PG-PN15	SM-60L-PG-PN15		1:15
S-SERVO-ST-60L-PG-PN25	SM-60L-PG-PN25		1:25
S-SERVO-ST-60L-PG-PN40	SM-60L-PG-PN40		1:40
S-SERVO-ST-60L-PG-PN50	SM-60L-PG-PN50		1:50

◆ S-SERVO MINI Drive Products

Unit Part Number	Motor Part Number	Drive Part Number	Reduction gear ratio
S-SERVO-MI-42S-PG-PN3	SM-42S-PG-PN3	SV-PD-MI-42S	1:3
S-SERVO-MI-42S-PG-PN5	SM-42S-PG-PN5		1:5
S-SERVO-MI-42S-PG-PN8	SM-42S-PG-PN8		1:8
S-SERVO-MI-42S-PG-PN10	SM-42S-PG-PN10		1:10
S-SERVO-MI-42S-PG-PN15	SM-42S-PG-PN15		1:15
S-SERVO-MI-42S-PG-PN25	SM-42S-PG-PN25		1:25
S-SERVO-MI-42S-PG-PN40	SM-42S-PG-PN40		1:40
S-SERVO-MI-42S-PG-PN50	SM-42S-PG-PN50		1:50
S-SERVO-MI-42M-PG-PN3	SM-42M-PG-PN3	SV-PD-MI-42M	1:3
S-SERVO-MI-42M-PG-PN5	SM-42M-PG-PN5		1:5
S-SERVO-MI-42M-PG-PN8	SM-42M-PG-PN8		1:8
S-SERVO-MI-42M-PG-PN10	SM-42M-PG-PN10		1:10
S-SERVO-MI-42M-PG-PN15	SM-42M-PG-PN15		1:15
S-SERVO-MI-42M-PG-PN25	SM-42M-PG-PN25		1:25
S-SERVO-MI-42M-PG-PN40	SM-42M-PG-PN40		1:40
S-SERVO-MI-42M-PG-PN50	SM-42M-PG-PN50		1:50
S-SERVO-MI-42L-PG-PN3	SM-42L-PG-PN3	SV-PD-MI-42L	1:3
S-SERVO-MI-42L-PG-PN5	SM-42L-PG-PN5		1:5
S-SERVO-MI-42L-PG-PN8	SM-42L-PG-PN8		1:8
S-SERVO-MI-42L-PG-PN10	SM-42L-PG-PN10		1:10
S-SERVO-MI-42L-PG-PN15	SM-42L-PG-PN15		1:15
S-SERVO-MI-42L-PG-PN25	SM-42L-PG-PN25		1:25
S-SERVO-MI-42L-PG-PN40	SM-42L-PG-PN40		1:40
S-SERVO-MI-42L-PG-PN50	SM-42L-PG-PN50		1:50
S-SERVO-MI-42XL-PG-PN3	SM-42XL-PG-PN3	SV-PD-MI-42XL	1:3
S-SERVO-MI-42XL-PG-PN5	SM-42XL-PG-PN5		1:5
S-SERVO-MI-42XL-PG-PN8	SM-42XL-PG-PN8		1:8
S-SERVO-MI-42XL-PG-PN10	SM-42XL-PG-PN10		1:10
S-SERVO-MI-42XL-PG-PN15	SM-42XL-PG-PN15		1:15
S-SERVO-MI-42XL-PG-PN25	SM-42XL-PG-PN25		1:25
S-SERVO-MI-42XL-PG-PN40	SM-42XL-PG-PN40		1:40
S-SERVO-MI-42XL-PG-PN50	SM-42XL-PG-PN50		1:50

Common

Standard Motor Specification and Size

1. Motor Specification

20 28 35

Model	Unit	SM-20M	SM-20L	SM-28S	SM-28M	SM-28L	SM-35M	SM-35L
Current per Phase	A	0.6	0.6	0.67	0.67	0.67	0.8	1
Holding Torque	N · m	0.020	0.039	0.059	0.093	0.118	0.078	0.137
Rotor Inertia	g · ㎠	2.5	5	9	12	18	10	14
Weight	g	70	80	110	140	200	120	180
Length(L)	mm	33	38	32	45	51	26	36

* Holding Torque is based on 100% Run Current

42 56 60

Model	Unit	SM-42S	SM-42M	SM-42L	SM-42XL	SM-56S	SM-56M	SM-56L	SM-60S	SM-60M	SM-60L
Current per Phase	A	1.33	1.68	1.68	1.2	2.8	2.8	2.8	4	4	4
Holding Torque	N · m	0.216	0.353	0.431	0.65	0.539	1.0	1.716	0.88	1.285	2.40
Rotor Inertia	g · ㎠	35	54	68	114	120	300	480	240	490	690
Weight	g	220	280	350	500	470	700	1000	600	1000	1300
Length(L)	mm	33	39	47	60	41	56	76	47	56	85

* Holding Torque is based on 100% Run Current

2. Torque Characteristic (S-SERVO Torque Graph according to Run Current Setting)

* Measured Condition Motor Voltage = 24VDC / Motor Current = Rated Current (Refer to Motor Specification) / Drive = S-SERVO

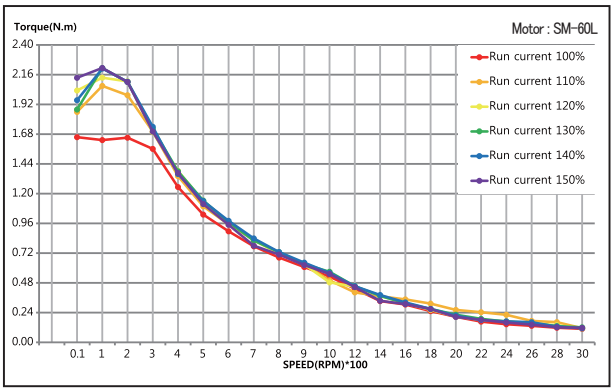

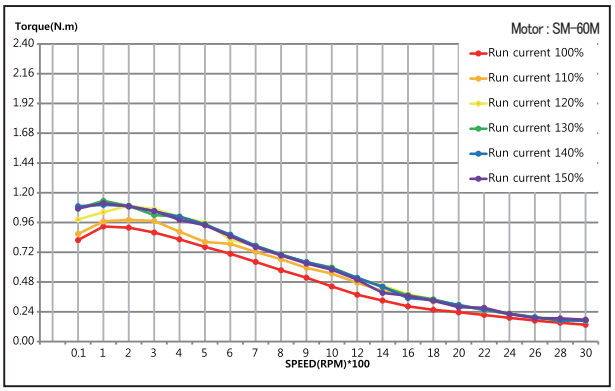

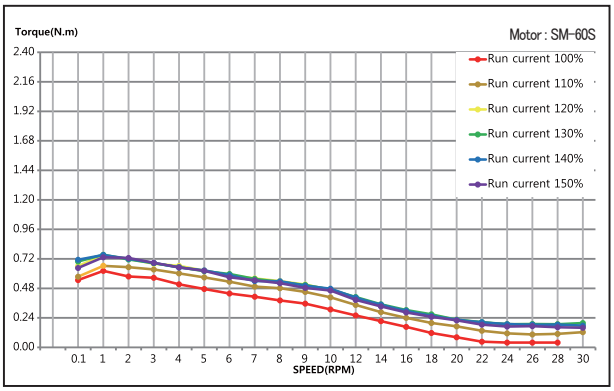

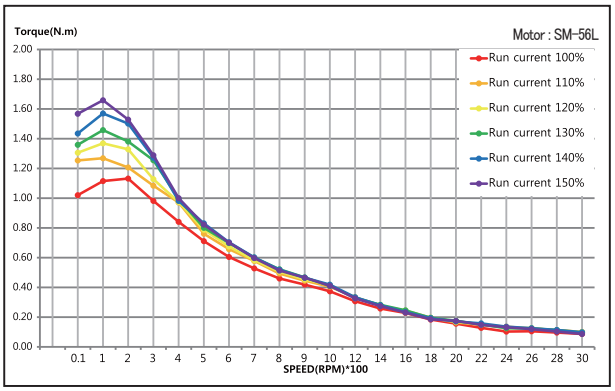

Standard Motor Specification and Size

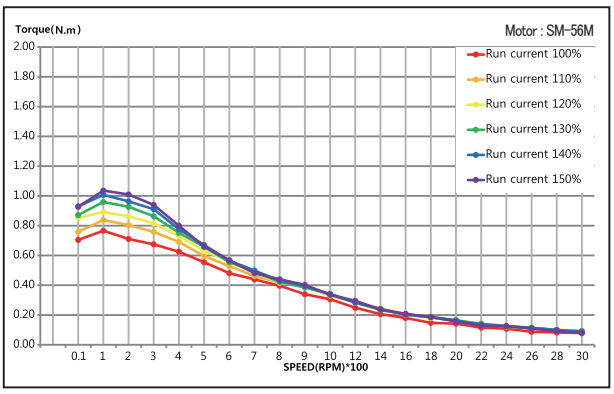

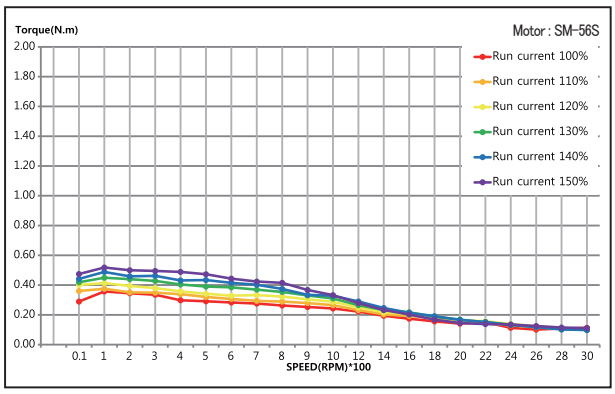

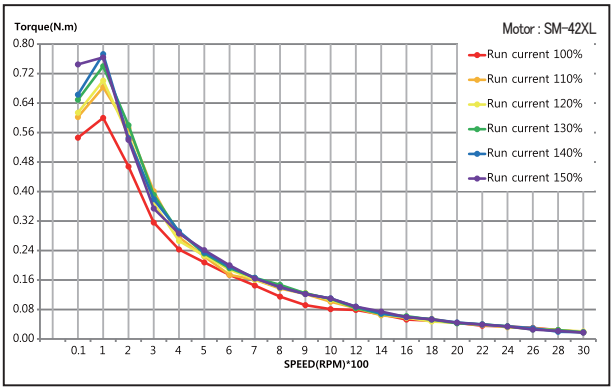

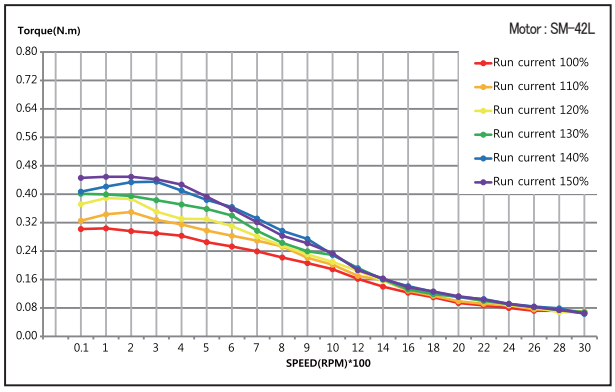

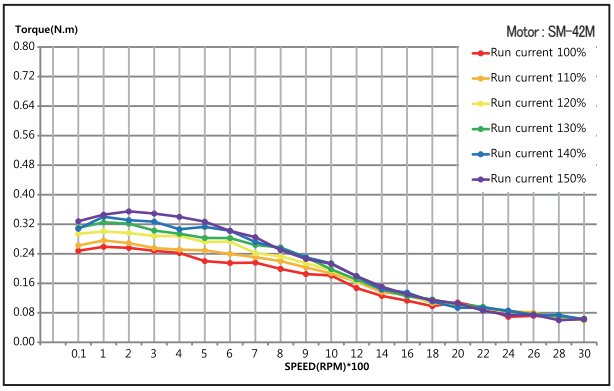

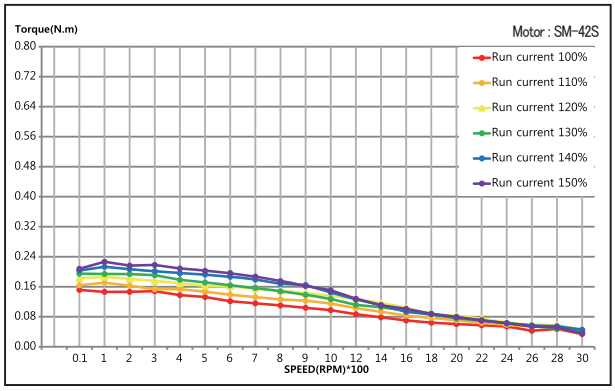

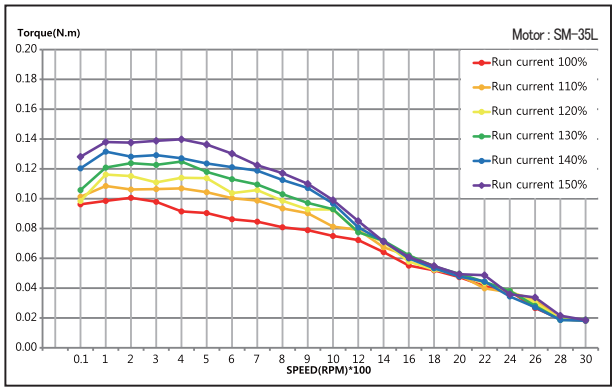

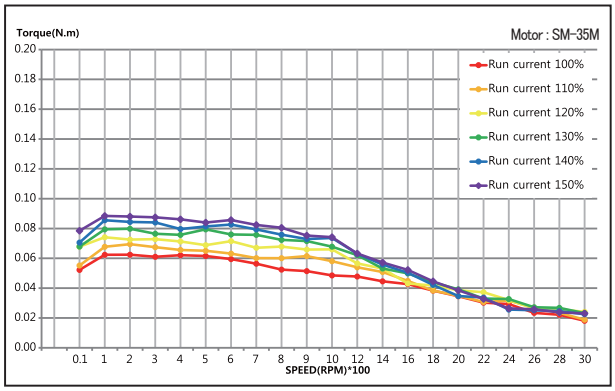

Standard Motor Specification and Size

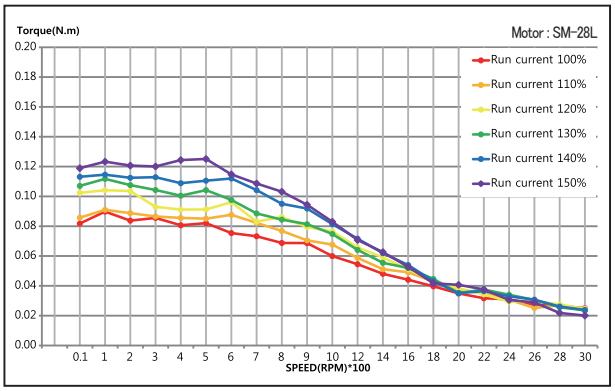

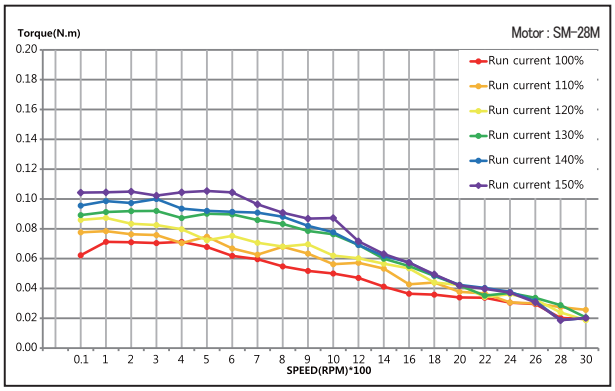

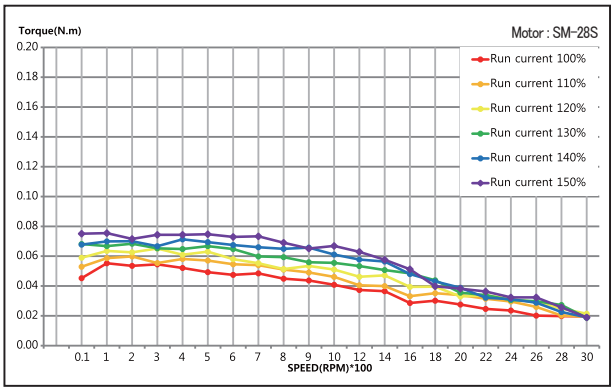

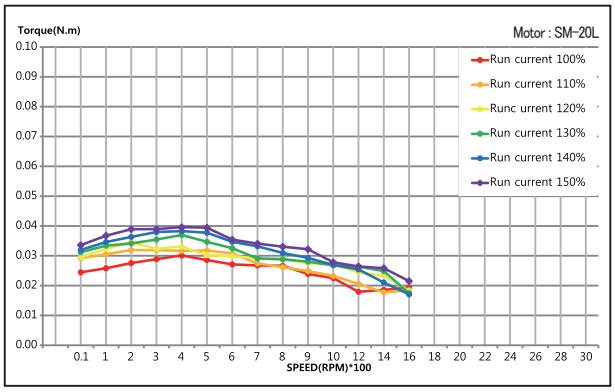

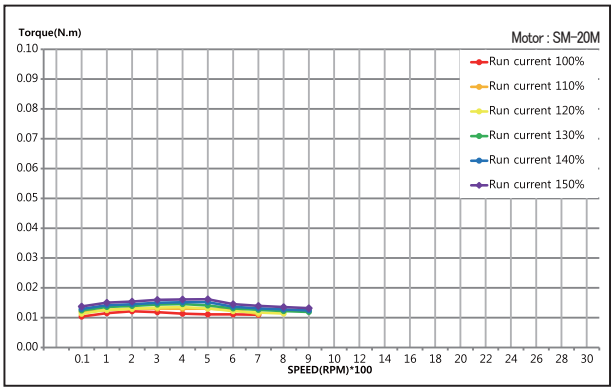

Standard Motor Specification and Size

3. Motor Size(mm)

20

Model name	Length(L)
SM-20M	33mm
SM-20L	38mm

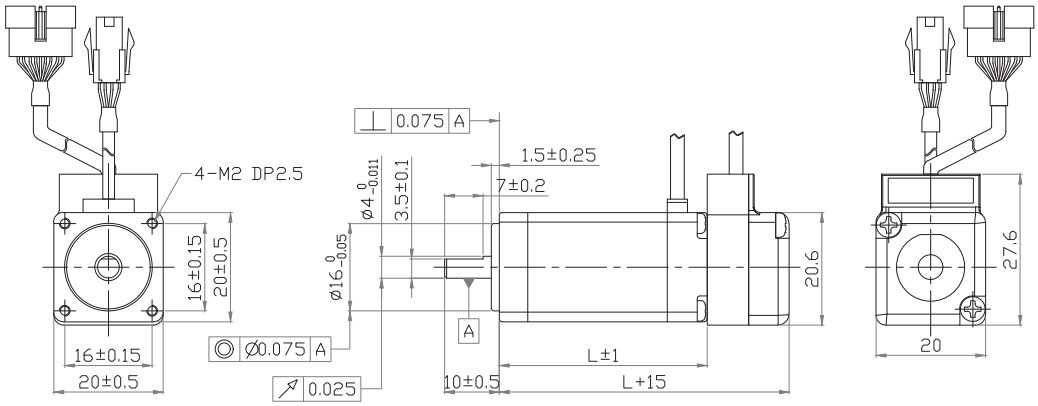

28

Model name	Length(L)
SM-28S	32mm
SM-28M	45mm
SM-28L	51mm

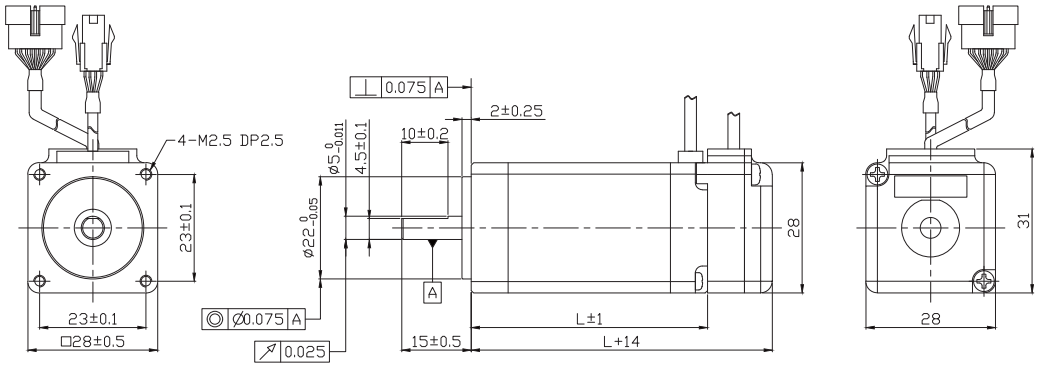

35

Model name	Length(L)
SM-35M	26mm
SM-35L	36mm

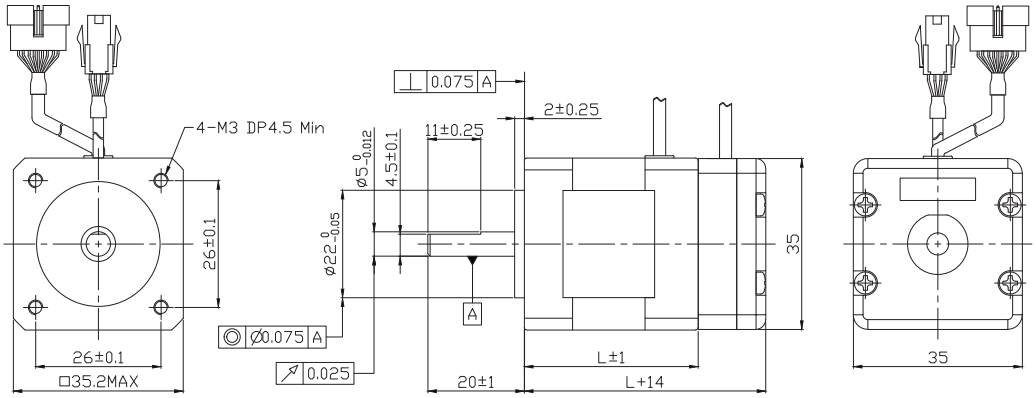

Standard Motor Specification and Size

3. Motor Size(mm)

42

Model name	Length(L)
SM-42S	33mm
SM-42M	39mm
SM-42L	47mm
SM-42XL	60mm

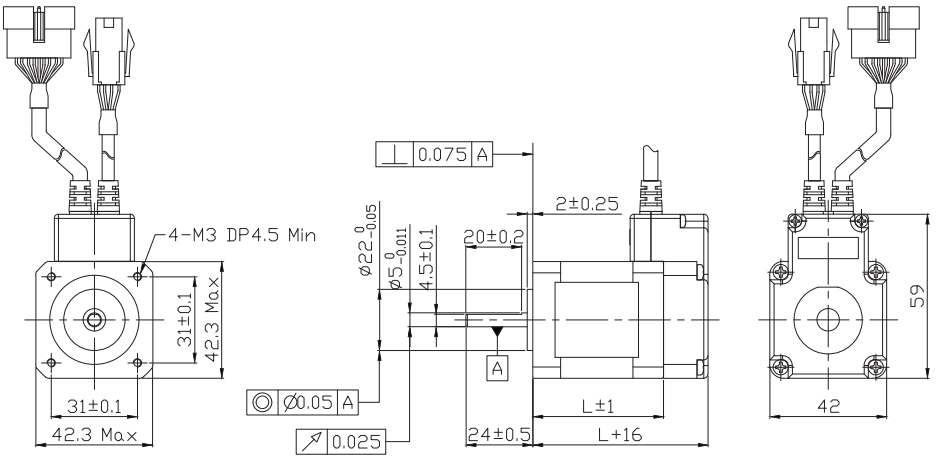

56

Model name	Length(L)
SM-56S	41mm
SM-56M	56mm
SM-56L	76mm

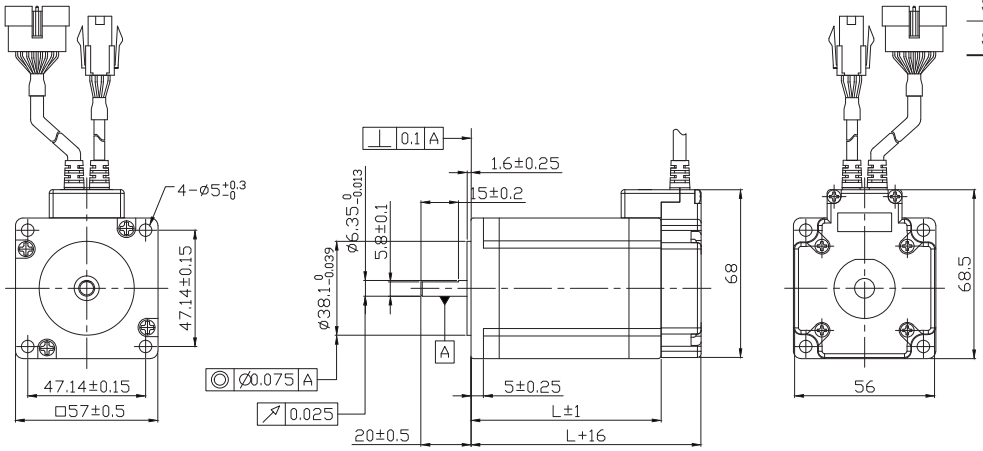

60

Model name	Length(L)
SM-60S	47mm
SM-60M	56mm
SM-60L	85mm

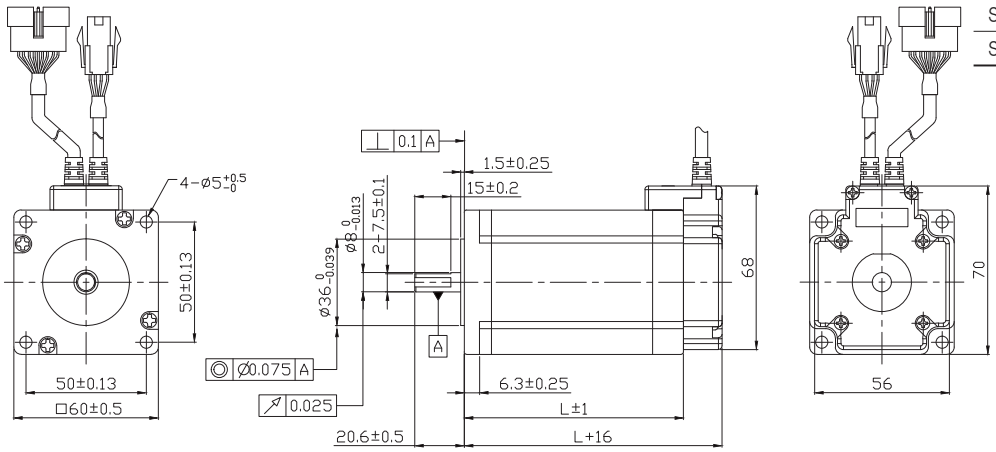

Common

Brake Installed Motor Specification and Size

1. Motor Specification

Unit Part Number	Model Name	Electronic Brake					Motor Unit Weight (g)	Permitted Overhung Load (N) Length from Motor Point (mm)				Permitted Thrust Load (N)
		Type	Voltage Input (V)	Rated Current (A)	Power Con-sumption	Statical Friction Torque (N · m)		3	8	13	18	
S-SERVO-ST-42S-BK S-SERVO-MI-42S-BK	SM-42S-BK	Non-excitation run Type	24VDC ±10%	0.3A ±10%	8.2	0.2	510	22	26	33	46	Must be Lower than Unit's Weight
S-SERVO-ST-42M-BK S-SERVO-MI-42M-BK	SM-42M-BK						570					
S-SERVO-ST-42L-BK S-SERVO-MI-42L-BK	SM-42L-BK						640					
S-SERVO-ST-42XL-BK S-SERVO-MI-42XL-BK	SM-42XL-BK						770					
S-SERVO-56S-BK	SM-56S-BK				7.5	0.7	870	52	65	85	123	
S-SERVO-56M-BK	SM-56M-BK						1190					
S-SERVO-56L-BK	SM-56L-BK						1380					
S-SERVO-60S-BK	SM-60S-BK				7.5	0.7	1150	70	87	114	165	
S-SERVO-60M-BK	SM-60M-BK						1350					
S-SERVO-60L-BK	SM-60L-BK						1960					

* Electronic Brake cannot be used for braking. Position hold purpose only when power OFF.
* The weight means Motor Unit Weight including Motor and Electronic Brake.
* Motor Model Name is combined model name of Motor and Brake.
* Motor specification and torque characteristic are same as Standard Motor.

* Brake Operation Timing Chart

S-SERVO control Brake by Drive automatically.
Please refer to below Timing Chart when control Brake from upper controller other than using S-SERVO Brake control.
Otherwise, Drive malfunctioning and loads can be fall down.
Also, please do not operate Brake while motor operation to prevent damage.

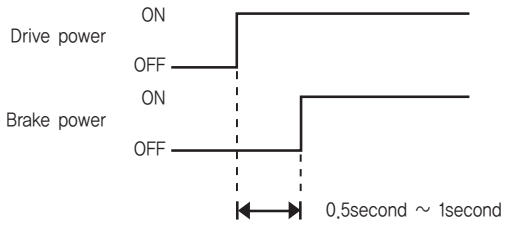

Brake Installed Motor Specification and Size

2. Motor Size(mm)

42

Model name	Length(L)
SM-42S	33mm
SM-42M	39mm
SM-42L	47mm
SM-42XL	60mm

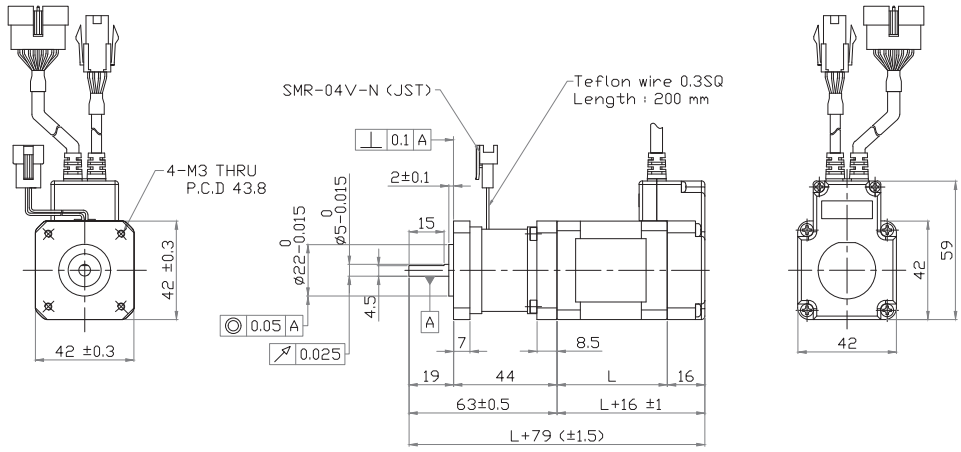

56

Model name	Length(L)
SM-56S	41mm
SM-56M	56mm
SM-56L	76mm

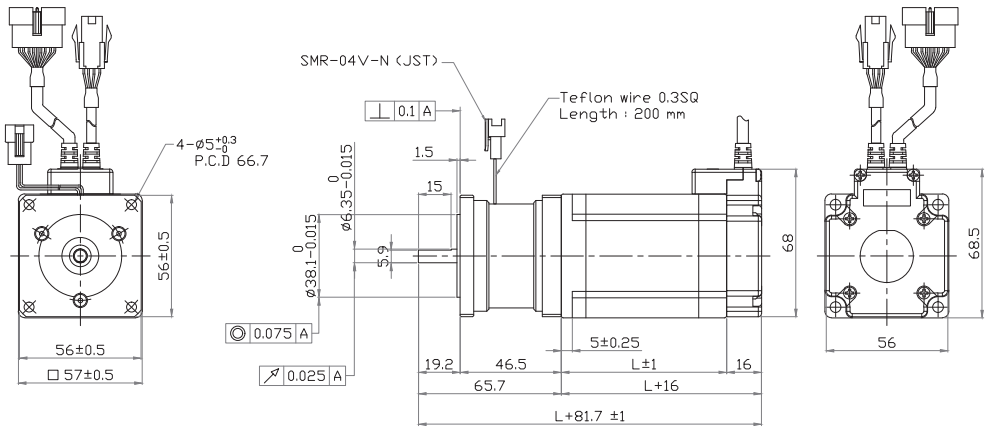

60

Model name	Length(L)
SM-60S	47mm
SM-60M	56mm
SM-60L	85mm

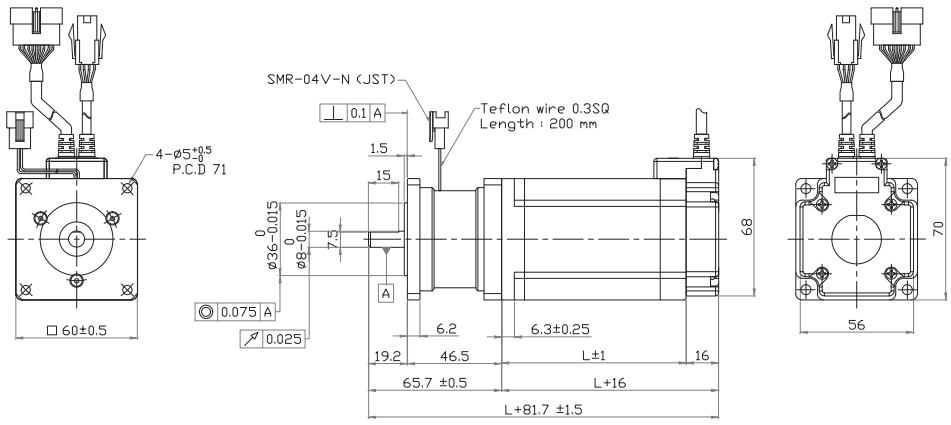

Gearbox Installed Motor Specification and Size

1. Gearbox for 42mm Motor Specification

Model Name	Maximum Holding Torque (N · m)	Rotor Inertia Moment (Kg · m²)	Backlash (min)	Angle Transmis-sion Error (min)	Reduction Gear Ratio	Resolution (10,000ppr Standard)	Permitted Torque (N · m)	Maximum Torque (N · m)	Permitted Speed Range (rpm)	Unit Weight (Kg)	Permitted Overhung Load (N) Axis Center Standard	Permitted Thrust Load (N)
S-SERVO-ST-42S-PG-PN3 S-SERVO-MI-42S-PG-PN3	0.8	$35x10^{-7}$	3	5	3	0.012°	6	18	0~1000	0.89	240	270
S-SERVO-ST-42S-PG-PN5 S-SERVO-MI-42S-PG-PN5	1.4				5	0.0072°	9	18	0~600		290	330
S-SERVO-ST-42S-PG-PN8 S-SERVO-MI-42S-PG-PN8					8	0.0045°	9	18	0~375		340	410
S-SERVO-ST-42S-PG-PN10 S-SERVO-MI-42S-PG-PN10	2.7				10	0.0036°	6	12	0~333		360	450
S-SERVO-ST-42S-PG-PN15 S-SERVO-MI-42S-PG-PN15	4.0		5	7	15	0.0024°	6	12	0~300	0.99	410	540
S-SERVO-ST-42S-PG-PN25 S-SERVO-MI-42S-PG-PN25	6.6				25	0.00144°	9	18	0~120		490	640
S-SERVO-ST-42S-PG-PN40 S-SERVO-MI-42S-PG-PN40	9.0				40	0.0009°	9	18	0~75		570	640
S-SERVO-ST-42S-PG-PN50 S-SERVO-MI-42S-PG-PN50					50	0.00072°	9	18	0~60		620	640
S-SERVO-ST-42M-PG-PN3 S-SERVO-MI-42M-PG-PN3	1.1	$54x10^{-7}$	3	5	3	0.012°	6	18	0~1000	0.96	240	270
S-SERVO-ST-42M-PG-PN5 S-SERVO-MI-42M-PG-PN5	1.9				5	0.0072°	9	18	0~600		290	330
S-SERVO-ST-42M-PG-PN8 S-SERVO-MI-42M-PG-PN8					8	0.0045°	9	18	0~375		340	410
S-SERVO-ST-42M-PG-PN10 S-SERVO-MI-42M-PG-PN10	3.7				10	0.0036°	6	12	0~333		360	450
S-SERVO-ST-42M-PG-PN15 S-SERVO-MI-42M-PG-PN15	5.4		5	7	15	0.0024°	6	12	0~300	1.06	410	540
S-SERVO-ST-42M-PG-PN25 S-SERVO-MI-42M-PG-PN25	9.0				25	0.00144°	9	18	0~120		490	640
S-SERVO-ST-42M-PG-PN40 S-SERVO-MI-42M-PG-PN40					40	0.0009°	9	18	0~75		570	640
S-SERVO-ST-42M-PG-PN50 S-SERVO-MI-42M-PG-PN50					50	0.00072°	9	18	0~60		620	640
S-SERVO-ST-42L-PG-PN3 S-SERVO-MI-42L-PG-PN3	1.4	$77x10^{-7}$	3	5	3	0.012°	6	18	0~1000	1.02	240	270
S-SERVO-ST-42L-PG-PN5 S-SERVO-MI-42L-PG-PN5	2.4				5	0.0072°	9	18	0~600		290	330
S-SERVO-ST-42L-PG-PN8 S-SERVO-MI-42L-PG-PN8	3.8				8	0.0045°	9	18	0~375		340	410
S-SERVO-ST-42L-PG-PN10 S-SERVO-MI-42L-PG-PN10	4.7				10	0.0036°	6	12	0~333		360	450
S-SERVO-ST-42L-PG-PN15 S-SERVO-MI-42L-PG-PN15	6.0		5	7	15	0.0024°	6	12	0~300	1.12	410	540
S-SERVO-ST-42L-PG-PN25 S-SERVO-MI-42L-PG-PN25	9.0				25	0.00144°	9	18	0~120		490	640
S-SERVO-ST-42L-PG-PN40 S-SERVO-MI-42L-PG-PN40					40	0.0009°	9	18	0~75		570	640
S-SERVO-ST-42L-PG-PN50 S-SERVO-MI-42L-PG-PN50					50	0.00072°	9	18	0~60		620	640
S-SERVO-ST-42XL-PG-PN3 S-SERVO-MI-42XL-PG-PN3	1.8	$114x10^{-7}$	3	5	3	0.012°	6	18	0~1000	1.15	240	270
S-SERVO-ST-42XL-PG-PN5 S-SERVO-MI-42XL-PG-PN5	3.0				5	0.0072°	9	18	0~600		290	330
S-SERVO-ST-42XL-PG-PN8 S-SERVO-MI-42XL-PG-PN8	4.8				8	0.0045°	9	18	0~375		340	410
S-SERVO-ST-42XL-PG-PN10 S-SERVO-MI-42XL-PG-PN10	6.0				10	0.0036°	6	12	0~333		360	450
S-SERVO-ST-42XL-PG-PN15 S-SERVO-MI-42XL-PG-PN15			5	7	15	0.0024°	6	12	0~300	1.25	410	540
S-SERVO-ST-42XL-PG-PN25 S-SERVO-MI-42XL-PG-PN25	9.0				25	0.00144°	9	18	0~120		490	640
S-SERVO-ST-42XL-PG-PN40 S-SERVO-MI-42XL-PG-PN40					40	0.0009°	9	18	0~75		570	640
S-SERVO-ST-42XL-PG-PN50 S-SERVO-MI-42XL-PG-PN50					50	0.00072°	9	18	0~60		620	640

Gearbox Installed Motor Specification and Size

2. Gearbox for 56mm Motor Specification

Model Name	Maximum Holding Torque (N · m)	Rotor Inertia Moment (Kg · m^2)	Backlash (min)	Angle Transmis-sion Error (min)	Reduction Gear Ratio	Resolution (10,000ppr Standard)	Permitted Torque (N · m)	Maximum Torque (N · m)	Permitted Speed Range (rpm)	Unit Weight (Kg)	Permitted Overhung Load (N) Axis Center Standard	Permitted Thrust Load (N)
S-SERVO-ST-56S-PG-PN3	1.6	$120x10^{-7}$	3	5	3	0.012°	27	50	0~1000	1.34	430	310
S-SERVO-ST-56S-PG-PN5	2.7				5	0.0072°	27	50	0~600	1.88	510	390
S-SERVO-ST-56S-PG-PN8	4.3				8	0.0045°	27	50	0~375		600	480
S-SERVO-ST-56S-PG-PN10	5.3				10	0.0036°	18	35	0~333		640	530
S-SERVO-ST-56S-PG-PN15	7.7				15	0.0024°	18	35	0~300	2.08	740	630
S-SERVO-ST-56S-PG-PN25	12.9				25	0.00144°	27	50	0~120		870	790
S-SERVO-ST-56S-PG-PN40	20.6				40	0.0009°	27	50	0~75		1000	970
S-SERVO-ST-56S-PG-PN50	25.8				50	0.00072°	27	50	0~60		1100	1000
S-SERVO-ST-56M-PG-PN3	2.6	$200x10^{-7}$	3	5	3	0.0012°	18	35	0~1000	1.4	430	310
S-SERVO-ST-56M-PG-PN5	4.4				5	0.0072°	27	50	0~600	2.15	510	390
S-SERVO-ST-56M-PG-PN8	7.0				8	0.0045°	27	50	0~375		600	480
S-SERVO-ST-56M-PG-PN10	8.7				10	0.0036°	18	35	0~333		640	530
S-SERVO-ST-56M-PG-PN15	12.7				15	0.0024°	18	35	0~300	2.35	740	630
S-SERVO-ST-56M-PG-PN25	21.1				25	0.00144°	27	50	0~120		870	790
S-SERVO-ST-56M-PG-PN40	27.0				40	0.0009°	27	50	0~75		1000	970
S-SERVO-ST-56M-PG-PN50					50	0.00072°	27	50	0~60		1100	1000
S-SERVO-ST-56L-PG-PN3	4.3	$480x10^{-7}$	3	5	3	0.012°	18	35	0~1000	1.1	430	310
S-SERVO-ST-56L-PG-PN5	7.2				5	0.0072°	27	50	0~600	2.22	510	390
S-SERVO-ST-56L-PG-PN8	11.4				8	0.0045°	27	50	0~375		600	480
S-SERVO-ST-56L-PG-PN10	14.3				10	0.0036°	18	35	0~333		640	530
S-SERVO-ST-56L-PG-PN15	18.0				15	0.0024°	18	35	0~300	2.42	740	630
S-SERVO-ST-56L-PG-PN25	27.0				25	0.00144°	27	50	0~120		870	790
S-SERVO-ST-56L-PG-PN40					40	0.0009°	27	50	0~75		1000	970
S-SERVO-ST-56L-PG-PN50					50	0.00072°	27	50	0~60		1100	1000

Gearbox Installed Motor Specification and Size

3. Gearbox for 60mm Motor Specification

Model Name	Maximum Holding Torque (N · m)	Rotor Inertia Moment (Kg · m²)	Backlash (min)	Angle Transmis-sion Error (min)	Reduction Gear Ratio	Resolution (10,000ppr Standard)	Permitted Torque (N · m)	Maximum Torque (N · m)	Permitted Speed Range (rpm)	Unit Weight (Kg)	Permitted Overhung Load (N) Axis Center Standard	Permitted Thrust Load (N)
S-SERVO-ST-60S-PG-PN3	2.6	$140x10^{-7}$	3	5	3	0.012°	18	35	0~1000	1.4	430	310
S-SERVO-ST-60S-PG-PN5	4.4				5	0.0072°	27	50	0~600	2.0	510	390
S-SERVO-ST-60S-PG-PN8	7.0				8	0.0045°	27	50	0~375		600	480
S-SERVO-ST-60S-PG-PN10	8.8				10	0.0036°	18	35	0~333		640	530
S-SERVO-ST-60S-PG-PN15	12.7				15	0.0024°	18	35	0~300	2.2	740	630
S-SERVO-ST-60S-PG-PN25	21.2				25	0.00144°	27	50	0~120		870	790
S-SERVO-ST-60S-PG-PN40	27.0				40	0.0009°	27	50	0~75		1000	970
S-SERVO-ST-60S-PG-PN50					50	0.00072°	27	50	0~60		1100	1000
S-SERVO-ST-60M-PG-PN3	3.6	$320x10^{-7}$	3	5	3	0.012°	18	35	0~1000	1.4	430	310
S-SERVO-ST-60M-PG-PN5	6.0				5	0.0072°	27	50	0~600	2.3	510	390
S-SERVO-ST-60M-PG-PN8	9.6				8	0.0045°	27	50	0~375		600	480
S-SERVO-ST-60M-PG-PN10	12.0				10	0.0036°	18	35	0~333		640	530
S-SERVO-ST-60M-PG-PN15	17.4				15	0.0024°	18	35	0~300	2.5	740	630
S-SERVO-ST-60M-PG-PN25	27.0				25	0.00144°	27	50	0~120		870	790
S-SERVO-ST-60M-PG-PN40					40	0.0009°	27	50	0~75		1000	970
S-SERVO-ST-60M-PG-PN50					50	0.00072°	27	50	0~60		1100	1000
S-SERVO-ST-60L-PG-PN3	7.1	$800x10^{-7}$	3	5	3	0.012°	18	35	0~1000	1.4	430	310
S-SERVO-ST-60L-PG-PN5	11.9				5	0.0072°	27	50	0~600	3.0	510	390
S-SERVO-ST-60L-PG-PN8	19.0				8	0.0045°	27	50	0~375		600	480
S-SERVO-ST-60L-PG-PN10	18.0				10	0.0036°	18	35	0~333		640	530
S-SERVO-ST-60L-PG-PN15					15	0.0024°	18	35	0~300	3.2	740	630
S-SERVO-ST-60L-PG-PN25	27.0				25	0.00144°	27	50	0~120		870	790
S-SERVO-ST-60L-PG-PN40					40	0.0009°	27	50	0~75		1000	970
S-SERVO-ST-60L-PG-PN50					50	0.00072°	27	50	0~60		1100	1000

Gearbox Installed Motor Specification and Size

4. Motor Size(mm)

42

Model Name	Applied Motor Model Name	Stage	□Second Stage	L Length (mm)
S-SERVO-ST-42S-PG-PN□ S-SERVO-MI-42S-PG-PN□	SM-42S-PG-PN□	Single Stage	3, 5, 8, 10	33
S-SERVO-ST-42M-PG-PN□ S-SERVO-MI-42M-PG-PN□	SM-42M-PG-PN□		3, 5, 8, 10	39
S-SERVO-ST-42L-PG-PN□ S-SERVO-MI-42L-PG-PN□	SM-42L-PG-PN□		3, 5, 8, 10	47
S-SERVO-ST-42XL-PG-PN□ S-SERVO-MI-42XL-PG-PN□	SM-42XL-PG-PN□		3, 5, 8, 10	60

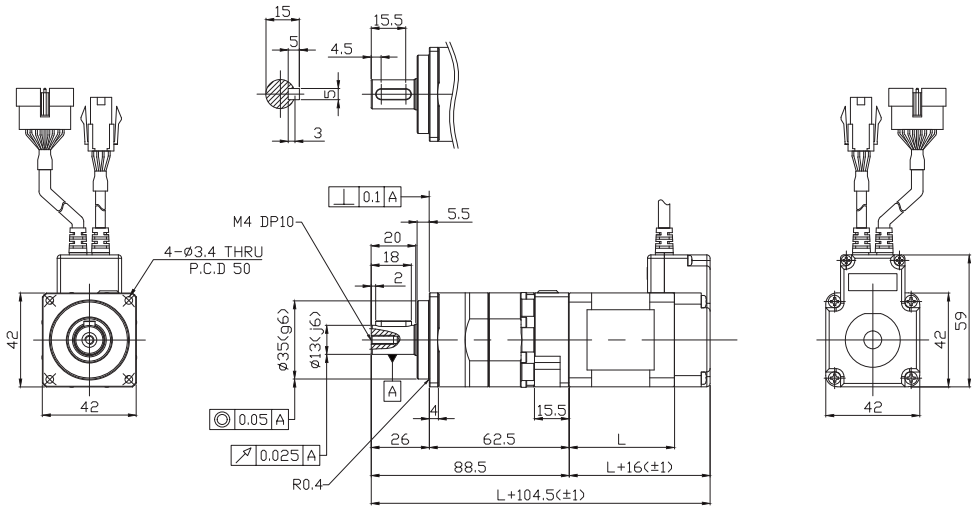

Model Name	Applied Motor Model Name	Stage	□Second Stage	L Length (mm)
S-SERVO-ST-42S-PG-PN□ S-SERVO-MI-42S-PG-PN□	SM-42S-PG-PN□	Second Stage	15, 25, 40, 50	33
S-SERVO-ST-42M-PG-PN□ S-SERVO-MI-42M-PG-PN□	SM-42M-PG-PN□		15, 25, 40, 50	39
S-SERVO-ST-42L-PG-PN□ S-SERVO-MI-42L-PG-PN□	SM-42L-PG-PN□		15, 25, 40, 50	47
S-SERVO-ST-42XL-PG-PN□ S-SERVO-MI-42XL-PG-PN□	SM-42XL-PG-PN□		15, 25, 40, 50	60

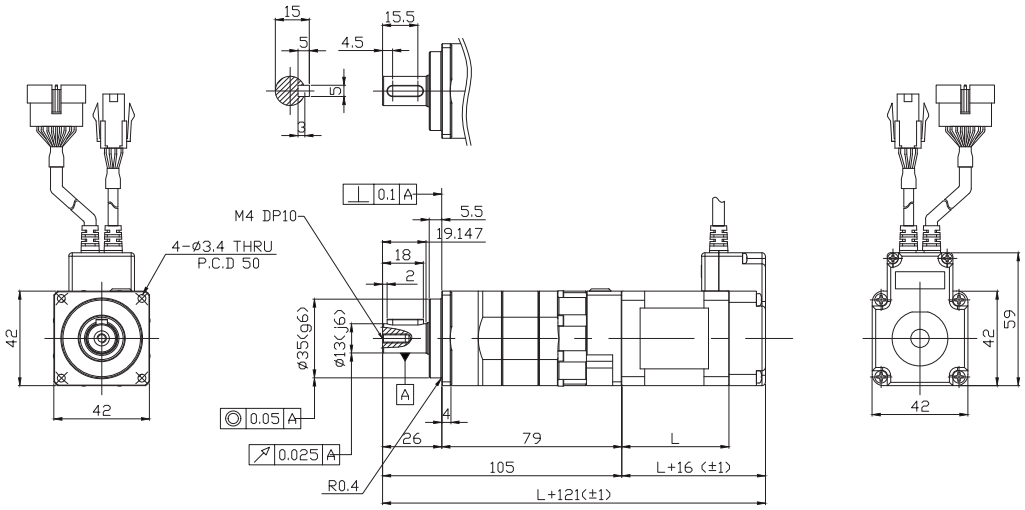

Gearbox Installed Motor Specification and Size

4. Motor Size(mm)

56

Model Name	Applied Motor Model Name	Stage	□Second Stage	L Length (mm)
S-SERVO-ST-56S-PG-PN□	SM-56S-PG-PN□	Single Stage	3, 5, 8, 10	41
S-SERVO-ST-56M-PG-PN□	SM-56M-PG-PN□		3, 5, 8, 10	56
S-SERVO-ST-56L-PG-PN□	SM-56L-PG-PN□		3, 5, 8, 10	76

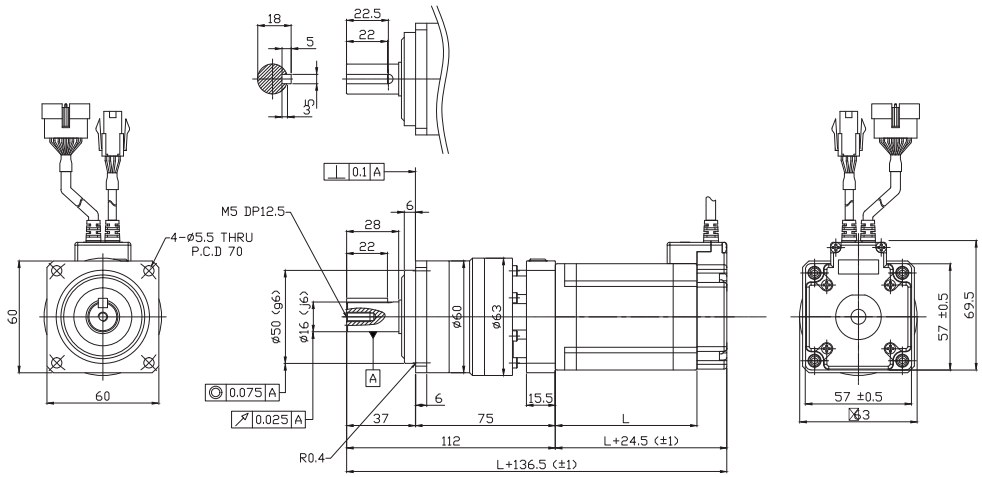

Model Name	Applied Motor Model Name	Stage	□Second Stage	L Length (mm)
S-SERVO-ST-56S-PG-PN□	SM-56S-PG-PN□	Second Stage	15, 25, 40, 50	41
S-SERVO-ST-56M-PG-PN□	SM-56M-PG-PN□		15, 25, 40, 50	56
S-SERVO-ST-56L-PG-PN□	SM-56L-PG-PN□		15, 25, 40, 50	76

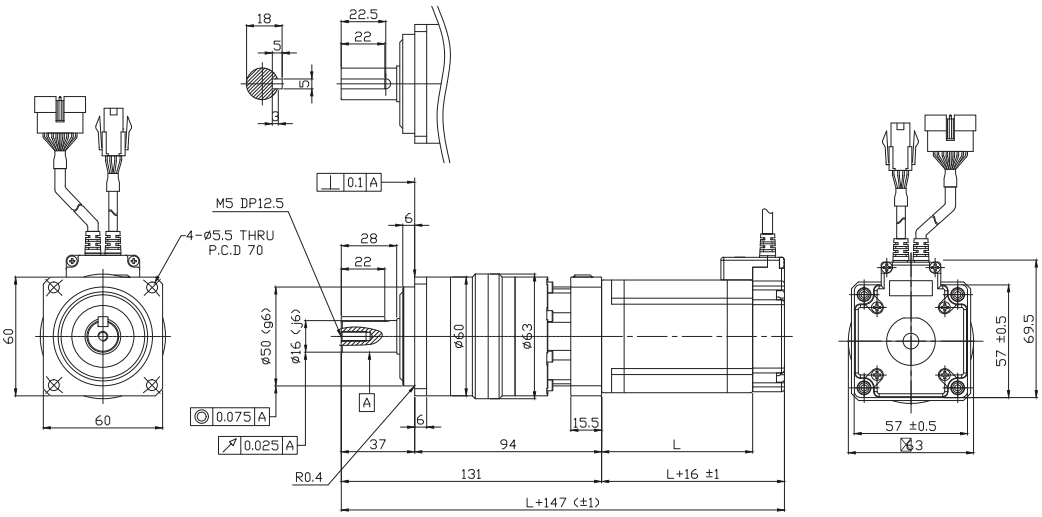

Gearbox Installed Motor Specification and Size

4. Motor Size(mm)

60

Model Name	Applied Motor Model Name	Stage	□Second Stage	L Length (mm)
S-SERVO-ST-60S-PG-PN□	SM-60S-PG-PN□	Single Stage	3, 5, 8, 10	47
S-SERVO-ST-60M-PG-PN□	SM-60M-PG-PN□		3, 5, 8, 10	56
S-SERVO-ST-60L-PG-PN□	SM-60L-PG-PN□		3, 5, 8, 10	85

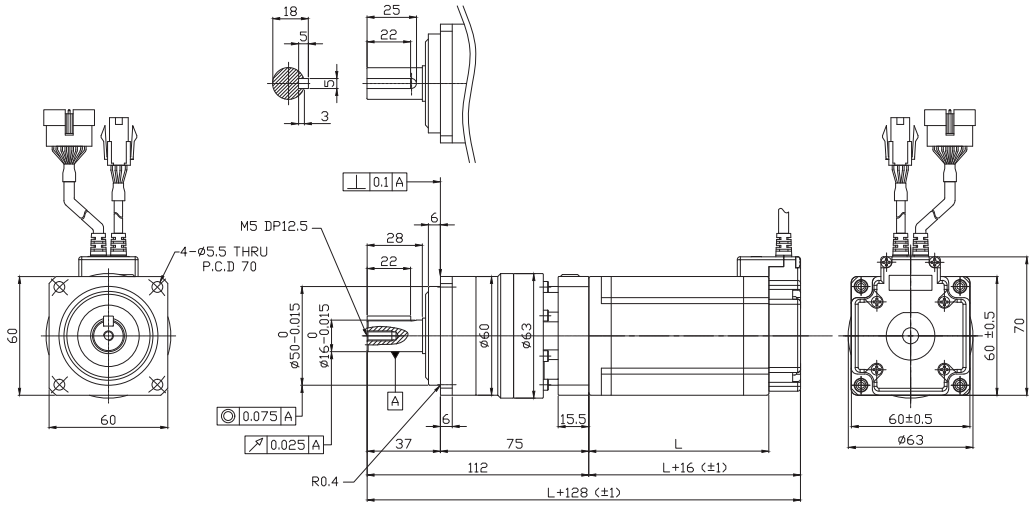

Model Name	Applied Motor Model Name	Stage	□Second Stage	L Length (mm)
S-SERVO-ST-60S-PG-PN□	SM-60S-PG-PN□	Second Stage	15, 25, 40, 50	47
S-SERVO-ST-60M-PG-PN□	SM-60M-PG-PN□		15, 25, 40, 50	56
S-SERVO-ST-60L-PG-PN□	SM-60L-PG-PN□		15, 25, 40, 50	85

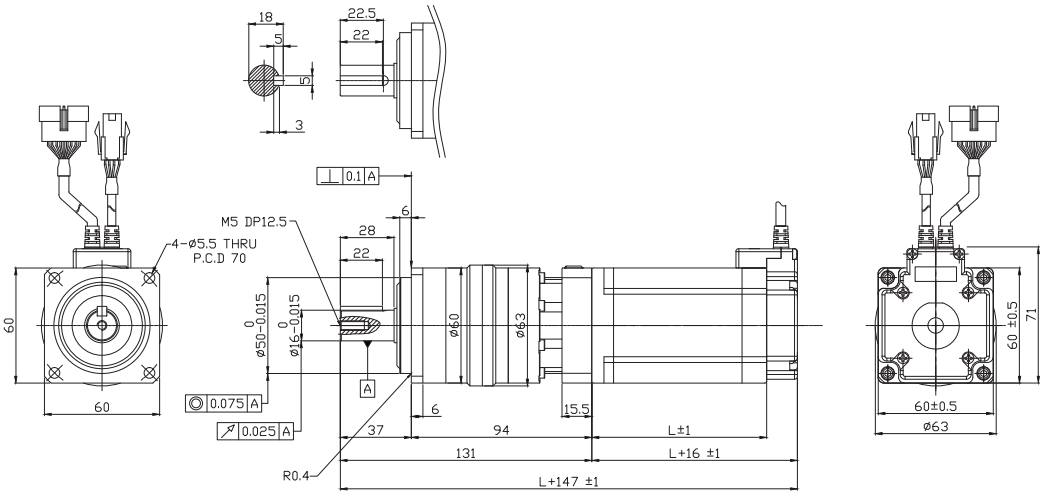

Drive Specifications

Motor Model		SM-20 series	SM-28 series	SM-35 series	SM-42 series	SM-56 series	SM-60 series
Drive Type		SV-PD-20 series	SV-PD-28 series	SV-PD-35 series	SV-PD-42 series	SV-PD-56 series	SV-PD-60 series
Input Voltage		24VDC ± 10%					
Control Method		Closed Loop control by ARM-based 32-bit MCU					
Current Consumption		Max 500mA (Except motor current)					
Operating Condition	Temperature	In use : 0~50℃ In Storage : -20~70℃					
	Humidity	In use : 35~85%RH (Non-condensing) In Storage : 10~90%RH (Non-condensing)					
	Vib. Resist	0.5G					
Functions*2	Rotation Speed	0~3,000rpm*1					
	Resolution [P/R]*4	500 1,000 1,600 2,000 3,200 3,600 4,000 5,000 6,400 8,000 10,000 20,000 25,000 36,000 40,000 50,000 (Selectable by DIP switch) * Default : 4,000					
	Maximum Input	500KHz (Duty 50%)					
	Protection Functions	Over Current, Over Speed, Position Tracking Error, Over Load, Over Temperature, Over Regenerated Voltage, Motor Connection Error, Encoder Connection Error, Motor Voltage Error, In-Position Error, ROM Error, Position Overflow Error					
	LED Display	Power status, In-Position status, Enable status, Alarm status					
	RUN Current*5	50%~150% (Setting by using GUI) RUN current is current value which flows onto the motor during operation (rotation) of the motor and it is set based on rated current of the motor. * Default : 100%					
	STOP Current	20%~100% (Setting by using GUI) When motor stop operation, 0.1 second after motor current will be set to STOP current value. STOP current value is a percentage of the rated current of motor. * Default : 50%					
	Pulse Input Method	1-Pulse/2-Pulse (Selectable by DIP switch) * Default : 2-Pulse					
	Rotational Direction	CW/CCW (Selectable by DIP switch) * Default : CW					
	Speed/Position Control Command	Pulse input					
Input*3 Output Signal	Input Signal Functions	Position command pulse, Enable, Alarm reset (Photocoupler input)					
	Output Signal Functions	In-Position, Alarm (Photocoupler output)					

*1 Maximum speed is variable according to resolution. Maximum speed is 3,000rpm until resolution 10,000. Over the 10,000 resolution, maximum rotation speed will be reduced.

*2 Please refer to 「Setting and operating」 (21 Page) to obtain detailed function information

*3 Please refer to 「Control Input/Output explanation」 (45 Page) to obtain detailed Input/Output signal information

*4 Maximum encoder resolution of S-SERVO is 4,000 [P/R].
If set resolution is above 4,000[P/R], it is microstepping operation between encoder pulse.

*5 For more detail information of RUN Current, please refer to the [Parameter Setting GUI] (Catalog page 46).

Drive Size (mm)

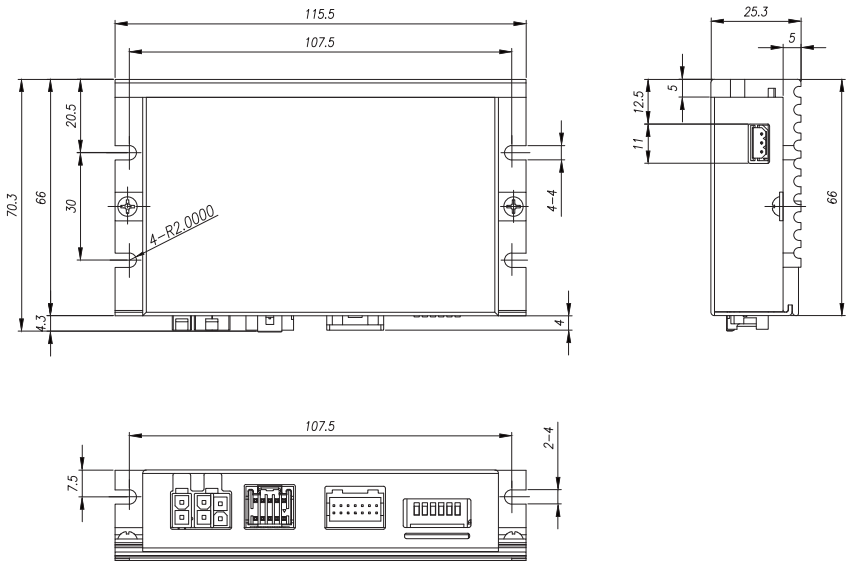

Setting and Operation

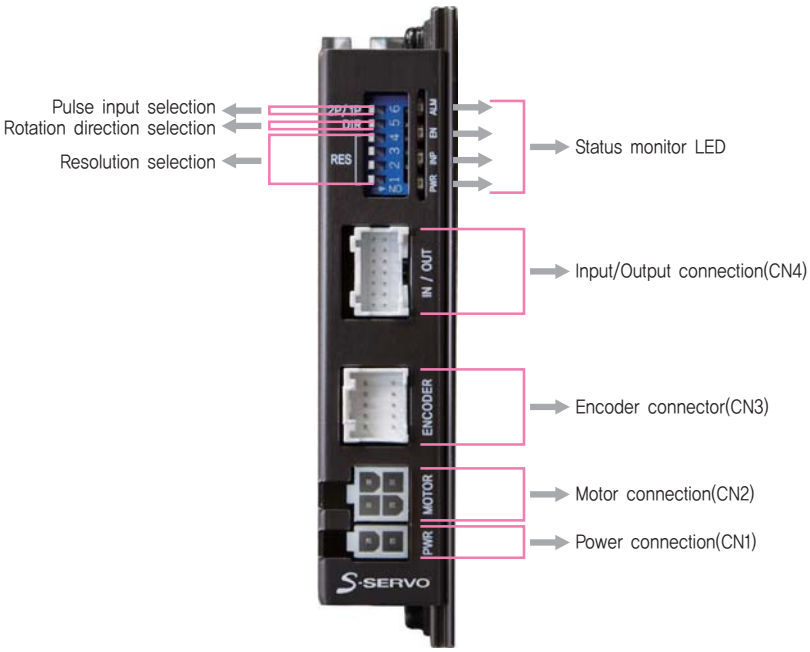

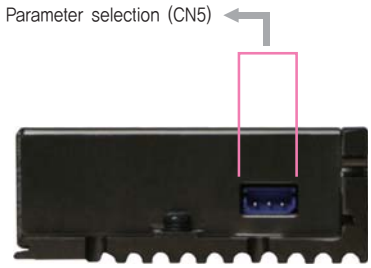

1. Status Monitor LED

Indication	Color	Function	ON/OFF Condition
PWR	Green	Power Input Indication	LED is turned ON when power is applied
INP	Yellow	Complete Positioning Motion	Light on when Position Deviation located within preset value* from target position, after Position Commando Pulse Input is completed
EN	Orange	Motor Enable Status	Enable : Lights On, Disable : Lights Off
ALM	Red	Alarm Indication	Flash when protection function is activated (Identifiable which protection mode is activated by counting the blinking times)

* Default = 0
Can be selected by parameter setting GUI

◆ Protection functions and LED flash times

Times	Protection	Conditions
1	Over Current Error	The current through power devices in inverter exceeds the limit value
2	Over Speed Error	Motor speed exceed 3,000rpm
3	Position Tracking Error	Position error value is higher than 90˚ in motor run state
4	Over Load Error	The motor is continuously operated more than 5 second under a load exceeding the max. torque
5	Over Temperature Error	Inside temperature of drive exceeds 85℃
6	Over Regenerative Voltage Error	Back-EMF more than 48V
7	Motor Connect Error	The power is ON without connection of the motor cable to drive
8	Encoder Connect Error	Cable connection error with Encoder connector in drive
9	Motor Voltage Error	Motor voltage less than 20V
10	In-Position Error	After operation is finished, a position error occurs
12	ROM Error	Error occurs in parameter storage device(ROM)
15	Position Overflow error	Position error value is higher than 90˚ in motor stop state

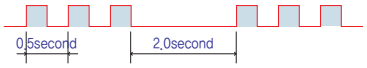

Alarm LED flash (ex: Position tracking error)

2. Resolution Selection Switch(SW1.1~SW1.4)

The number of pulse per revolution.

Position(SW1)				Pulse/Revolution	Position(SW1)				Pulse/Revolution
1	2	3	4		1	2	3	4	
ON	ON	ON	ON	500	OFF	ON	ON	ON	6,400
ON	ON	ON	OFF	1,000	OFF	ON	ON	OFF	8,000
ON	ON	OFF	ON	1,600	OFF	ON	OFF	ON	10,000
ON	ON	OFF	OFF	2,000	OFF	ON	OFF	OFF	20,000
ON	OFF	ON	ON	3,200	OFF	OFF	ON	ON	25,000
ON	OFF	ON	OFF	3,600	OFF	OFF	ON	OFF	36,000
ON	OFF	OFF	ON	*4,000	OFF	OFF	OFF	ON	40,000
ON	OFF	OFF	OFF	5,000	OFF	OFF	OFF	OFF	50,000

* Default = 4,000

3. Rotational Direction Selection Switch(SW1.5)

Indication	Switch Name	Functions
DIR	Switching Rotational Direction	Based on CW(+Dir signal) input to driver. ON : CCW(−Direction) OFF : CW(+Direction) * Default : CW mode

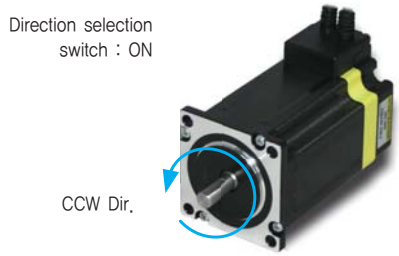

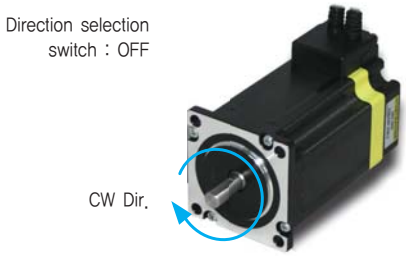

4. Pulse Input Selection Switch(SW1.6)

Indication	Switch Name	Functions
2P/1P	Selecting Pulse Input Mode	Selectable 1−Pulse input mode or 2−Pulse input mode as Pulse input signal. ON : 1−Pulse mode OFF : 2−Pulse mode * Default : 2−Pulse mode

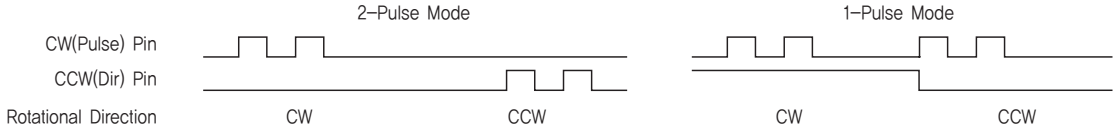

5. Power Connector(CN1)

NO.	Function
1	24VDC ±10%
2	GND

6. Motor Connector(CN2)

NO.	Function
1	A Phase
2	B Phase
3	/A Phase
4	/B Phase

7. Encoder Connector(CN3)

NO.	Function	I/O
1	A+	Input
2	A−	Input
3	B+	Input
4	B−	Input
5	NC	---
6	NC	---
7	5VDC	Output
8	5GND	Output
9	F. GND	---
10	F. GND	---

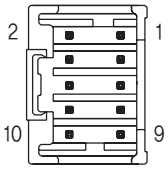

8. Input/Output Signal(CN4)

NO.	Function	I/O
1	Brake−	Output
2	Brake+	Output
3	24GND(EXT)	Input
4	24V(EXT)	Input
5	Alarm Reset	Input
6	Enable	Input
7	Alarm	Output
8	In−Position	Output
9	Open Collector Input	Input
10	F.GND	---
11	CW−(Pulse−)	Input
12	CW+(Pulse+)	Input
13	CCW−(Dir−)	Input
14	CCW+(Dir+)	Input

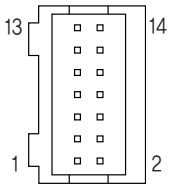

9. Parameter Connector(CN5)

NO.	Function	I/O
1	TX	Output
2	RX	Input
3	GND	---

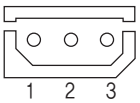

System Configuration

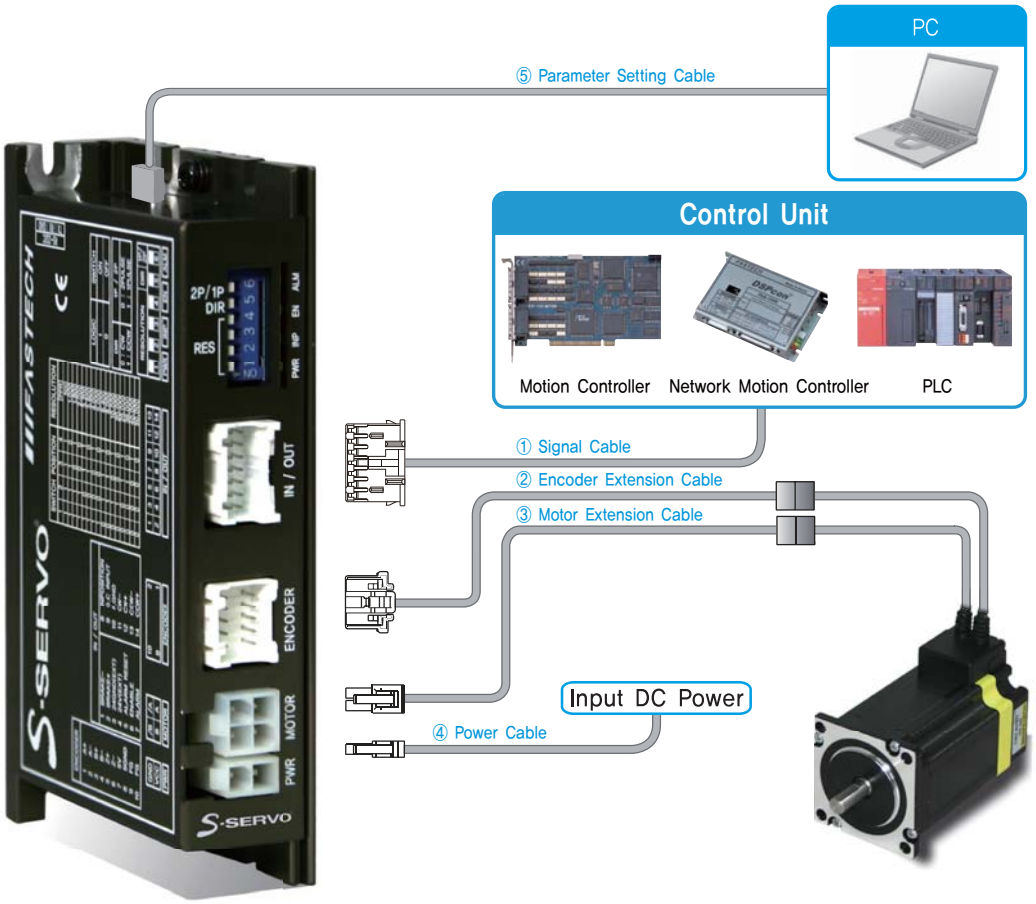

Type	Signal Cable	Encoder Cable	Motor Cable	Power Cable	Parameter Setting Cable
Standard Length	–	30cm	30cm	–	–
Max. Length	20m	20m	20m	2m	2m

Accessories [S-SERVO ST]

Purpose		ITEM	Standard	Quantity	Manufacturer
I/O Connections(CN1)		Housing	PADP-14V-1-S	1	JST
		Terminal	SPH-002T-P0.5L	16	
Encoder Connection	Drive Side(CN2)	Housing	51353-1000	1	MOLEX
		Terminal	56134-9000	12	
	Encoder Side	Housing	SMP-09V-NC	1	JST
		Terminal	SHF-001T-0.8BS	10	
Motor Connection	Drive Side(CN3)	Housing	5557-04R	1	MOLEX
		Terminal	5556T	5	
	Motor Side	Housing	5557-04R	1	
		Terminal	5556T	5	
Power Connection(CN4)		Housing	5557-02R	1	
		Terminal	5556T	3	

Cable Option

①Signal Cable

Model Name	Length(m)	Remark
CSSO-S-□□□F CSSO-S-□□□M	□□□ □□□	Normal Cable Robot Cable

□is for Cable Length, The unit is 1m and Max. 20m Length.

Manufacturer : JST
Housing : PADP-14V-1-S
Terminal : SPH-002T-P0.5L

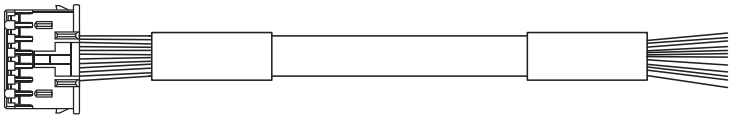

②Encoder Extension Cable

Model Name	Length(m)	Remark
CSVO-E-□□□F CSVO-E-□□□M	□□□ □□□	Normal Cable Robot Cable

□is for Cable Length, The unit is 1m and Max. 20m Length.

Manufacturer : MOLEX
Housing : 51353-1000
Terminal : 56134-9000

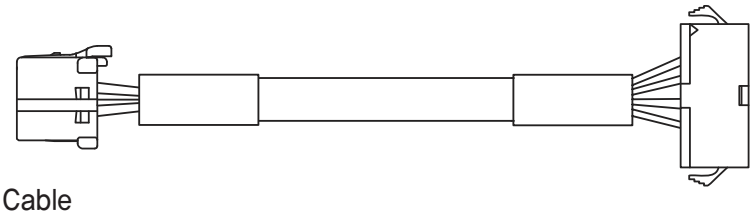

Manufacturer : JST
Housing : SMP-09V-NC
Terminal : SHF-001T-0.8BS

③Motor Extension Cable

Model Name	Length(m)	Remark
CSVO-M-□□□F CSVO-M-□□□M	□□□ □□□	Normal Cable Robot Cable

□is for Cable Length, The unit is 1m and Max. 20m Length.

Manufacturer : MOLEX
Housing : 5557-04R
Terminal : 5556T

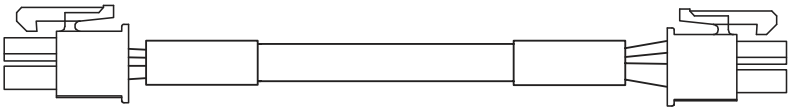

Manufacturer : MOLEX
Housing : 5557-04R
Terminal : 5556T

④Drive Power Cable

Model Name	Length(m)	Remark
CSVO-P-□□□F CSVO-P-□□□M	□□□ □□□	Normal Cable Robot Cable

□is for Cable Length, The unit is 1m and Max. 2m Length.

Manufacturer : MOLEX
Housing : 5557-02R
Terminal : 5556T

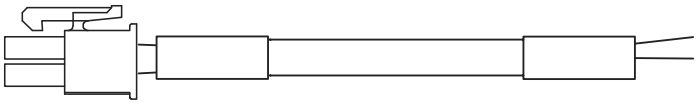

⑤Parameter Setting Cable

Model Name	Length(m)	Remark
CBTS-C-□□□F	□□□	Normal Cable

□is for Cable Length, The unit is 1m and Max. 2m Length.

Manufacturer : MOLEX
Housing : 5264-03
Terminal : 5263

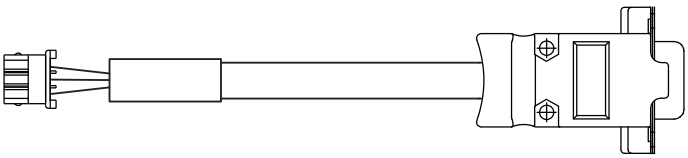

Manufacturer : AMPHENOL
Connector : L177SDE09S
Backshell : 17E-1657-09

External Wiring Diagram

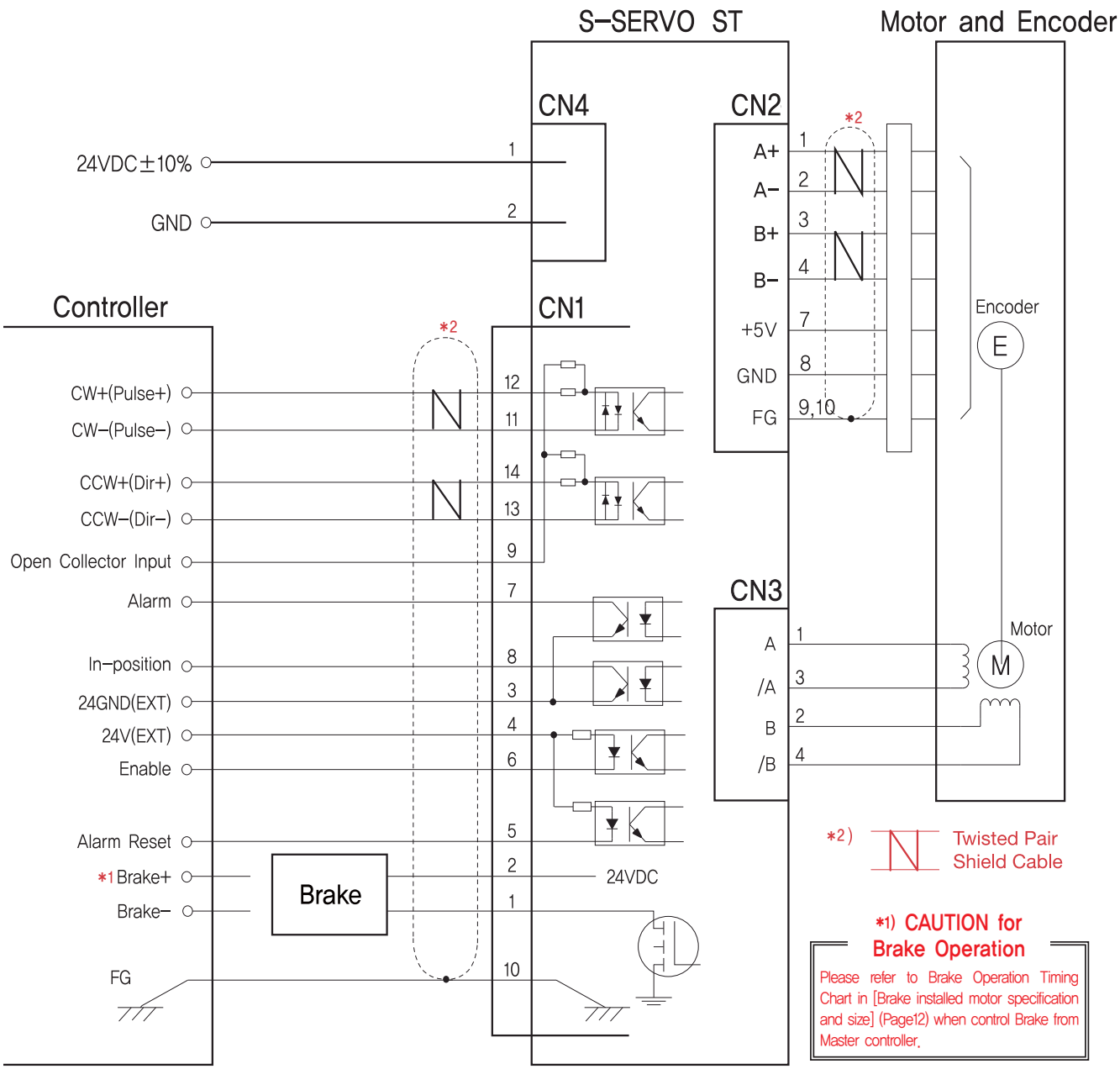

* Turn power off of S-SERVO drive and master controller when connect I/O cable between drive and master controller to avoid any damage.

Drive Specifications

Motor Model		SM-20 series	SM-28 series	SM-35 series	SM-42 series	SM-56 series	SM-60 series
Drive Type		SV-PD-MI-20 series	SV-PD-MI-28 series	SV-PD-MI-35 series	SV-PD-MI-42 series	-	-
Input Voltage		24VDC ± 10%					
Control Method		Closed Loop control by ARM-based 32-bit MCU					
Current Consumption		Max 500mA (Except motor current)					
Operating Condition	Temperature	In use : 0~50℃ In Storage : -20~70℃					
	Humidity	In use : 35~85%RH (Non-condensing) In Storage : 10~90%RH (Non-condensing)					
	Vib. Resist	0.5G					
Functions*2	Rotation Speed	0~3,000rpm*1					
	Resolution [P/R]*4	500 1,000 1,600 2,000 3,200 3,600 4,000 5,000 6,400 8,000 10,000 20,000 25,000 36,000 40,000 50,000 (Selectable by DIP switch) * Default : 4,000					
	Maximum Input	500KHz (Duty 50%)					
	Protection Functions	Over Current, Over Speed, Position Tracking Error, Over Load, Over Temperature, Over Regenerated Voltage, Motor Connection Error, Encoder Connection Error, Motor Voltage Error, In-Position Error, ROM Error, Position Overflow Error					
	LED Display	Power status, In-Position status, Enable status, Alarm status					
	RUN Current*5	50%~150% (Setting by using GUI) RUN current is current value which flows onto the motor during operation (rotation) of the motor and it is set based on rated current of the motor. * Default : 100%					
	STOP Current	20%~100% (Setting by using GUI) When motor stop operation, 0.1 second after motor current will be set to STOP current value. STOP current value is a percentage of the rated current of motor. * Default : 50%					
	Pulse Input Method	1-Pulse/2-Pulse (Selectable by DIP switch) * Default : 2-Pulse					
	Rotational Direction	CW/CCW (Selectable by DIP switch) * Default : CW					
	Speed/Position Control Command	Pulse input					
Input Output Signal*3	Input Signal Functions	Position command pulse, Enable, Alarm reset (Photocoupler input)					
	Output Signal Functions	In-Position, Alarm (Photocoupler output)					

*1 Maximum speed is variable according to resolution. Maximum speed is 3,000rpm until resolution 10,000. Over the 10,000 resolution, maximum rotation speed will be reduced.

*2 Please refer to 「Setting and operating」 (27 Page) to obtain detailed function information

*3 Please refer to 「Control Input/Output explanation」 (45 Page) to obtain detailed Input/Output signal information

*4 Maximum encoder resolution of S-SERVO is 4,000 [P/R].
If set resolution is above 4,000[P/R], it is microstepping operation between encoder pulse.

*5 For more detail information of RUN Current, please refer to the [Parameter Setting GUI] (Catalog page 46).

Drive Size (mm)

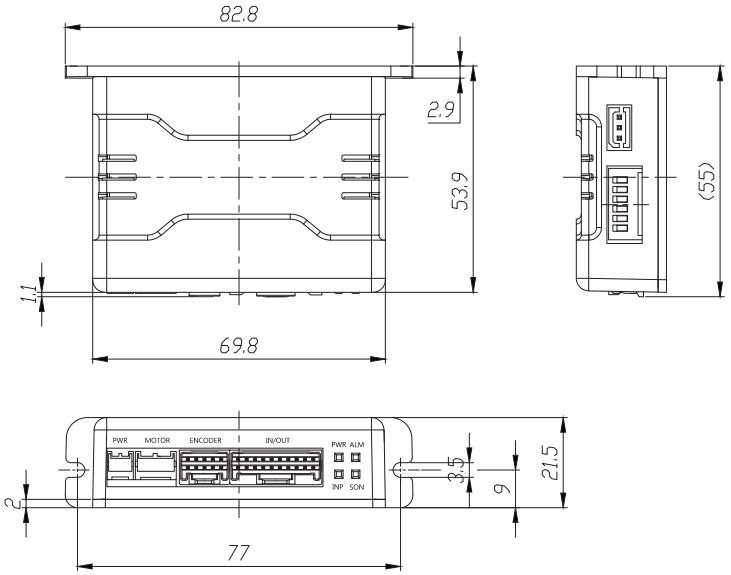

Setting and Operation

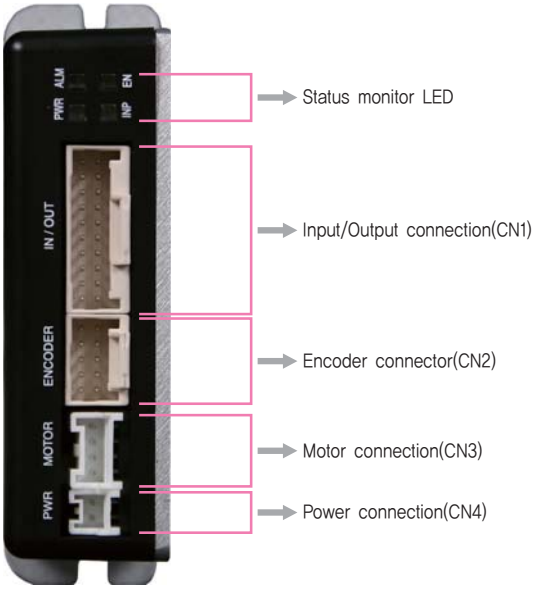

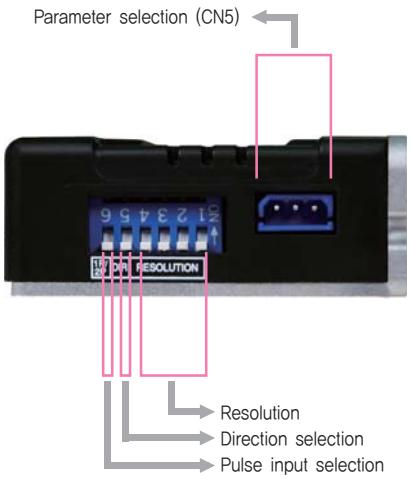

1. Status Monitor LED

Indication	Color	Function	ON/OFF Condition
PWR	Green	Power Input Indication	LED is turned ON when power is applied
INP	Yellow	Complete Positioning Motion	Light on when Position Deviation located within preset value* from target position, after Position Commando Pulse Input is completed
EN	Orange	Motor Enable Status	Enable : Lights On, Disable : Lights Off
ALM	Red	Alarm Indication	Flash when protection function is activated (Identifiable which protection mode is activated by counting the blinking times)

* Default = 0
Can be selected by parameter setting GUI

◆ Protection functions and LED flash times

Times	Protection	Conditions
1	Over Current Error	The current through power devices in inverter exceeds the limit value
2	Over Speed Error	Motor speed exceed 3,000rpm
3	Position Tracking Error	Position error value is higher than 90˚ in motor run state
4	Over Load Error	The motor is continuously operated more than 5 second under a load exceeding the max. torque
5	Over Temperature Error	Inside temperature of drive exceeds 85℃
6	Over Regenerated Voltage Error	Back-EMF more than 48V
7	Motor Connect Error	The power is ON without connection of the motor cable to drive
8	Encoder Connect Error	Cable connection error with Encoder connector in drive
9	Motor Voltage Error	Motor voltage less than 20V
10	In-Position Error	After operation is finished, a position error occurs
12	ROM Error	Error occurs in parameter storage device(ROM)
15	Position Overflow Error	Position error value is higher than 90˚ in motor stop state

Alarm LED flash (ex: Position tracking error)

2. Resolution Selection Switch(SW1.1~SW1.4)

The number of pulse per revolution.

Position(SW1)				Pulse/Revolution	Position(SW1)				Pulse/Revolution
1	2	3	4		1	2	3	4	
ON	ON	ON	ON	500	OFF	ON	ON	ON	6,400
ON	ON	ON	OFF	1,000	OFF	ON	ON	OFF	8,000
ON	ON	OFF	ON	1,600	OFF	ON	OFF	ON	10,000
ON	ON	OFF	OFF	2,000	OFF	ON	OFF	OFF	20,000
ON	OFF	ON	ON	3,200	OFF	OFF	ON	ON	25,000
ON	OFF	ON	OFF	3,600	OFF	OFF	ON	OFF	36,000
ON	OFF	OFF	ON	*4,000	OFF	OFF	OFF	ON	40,000
ON	OFF	OFF	OFF	5,000	OFF	OFF	OFF	OFF	50,000

* Default = 4,000

3. Rotational Direction Selection Switch(SW1.5)

Indication	Switch Name	Functions
DIR	Switching Rotational Direction	Based on CW(+Dir signal) input to driver. ON : CCW(−Direction) OFF : CW(+Direction) * Default : CW mode

Direction selection switch : ON

CCW Dir.

Direction selection switch : OFF

CW Dir.

4. Pulse Input Selection Switch(SW1.6)

Indication	Switch Name	Functions
2P/1P	Selecting pulse input mode	Selectable 1−Pulse input mode or 2−Pulse input mode as Pulse input signal. ON : 1−Pulse mode OFF : 2−Pulse mode * Default : 2−Pulse mode

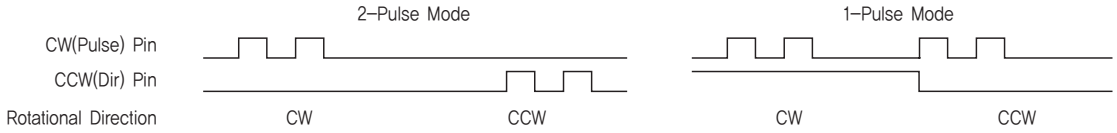

5. Power Connector(CN4)

NO.	Function
1	24VDC ±10%
2	GND

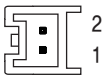

6. Motor Connector(CN3)

NO.	Function
1	B Phase
2	/B Phase
3	/A Phase
4	A Phase

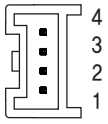

7. Encoder Connector(CN2)

NO.	Function	I/O
1	A+	Input
2	A−	Input
3	B+	Input
4	B−	Input
5	NC	---
6	NC	---
7	5VDC	Output
8	5GND	Output
9	F. GND	---
10	F. GND	---

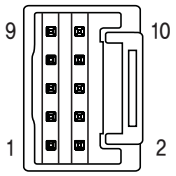

8. Input/Output Signal(CN1)

NO.	Function	I/O
1	CW+(Pulse+)	Input
2	CW−(Pulse−)	Input
3	CCW+(Dir+)	Input
4	CCW−(Dir−)	Input
5	NC	---
6	NC	---
7	NC	---
8	NC	---
9	NC	---
10	NC	---
11	Alarm	Output
12	In−Position	Output
13	Enable	Input
14	Alarm Reset	Input
15	Open Collector Input	Input
16	Brake+	Output
17	Brake−	Output
18	NC	---
19	24GND(EXT)	Input
20	24V(EXT)	Input

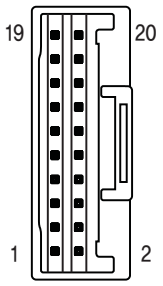

9. Parameter Connector(CN5)

NO.	Function	I/O
1	TX	Output
2	RX	Input
3	GND	---

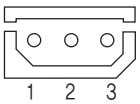

System Configuration

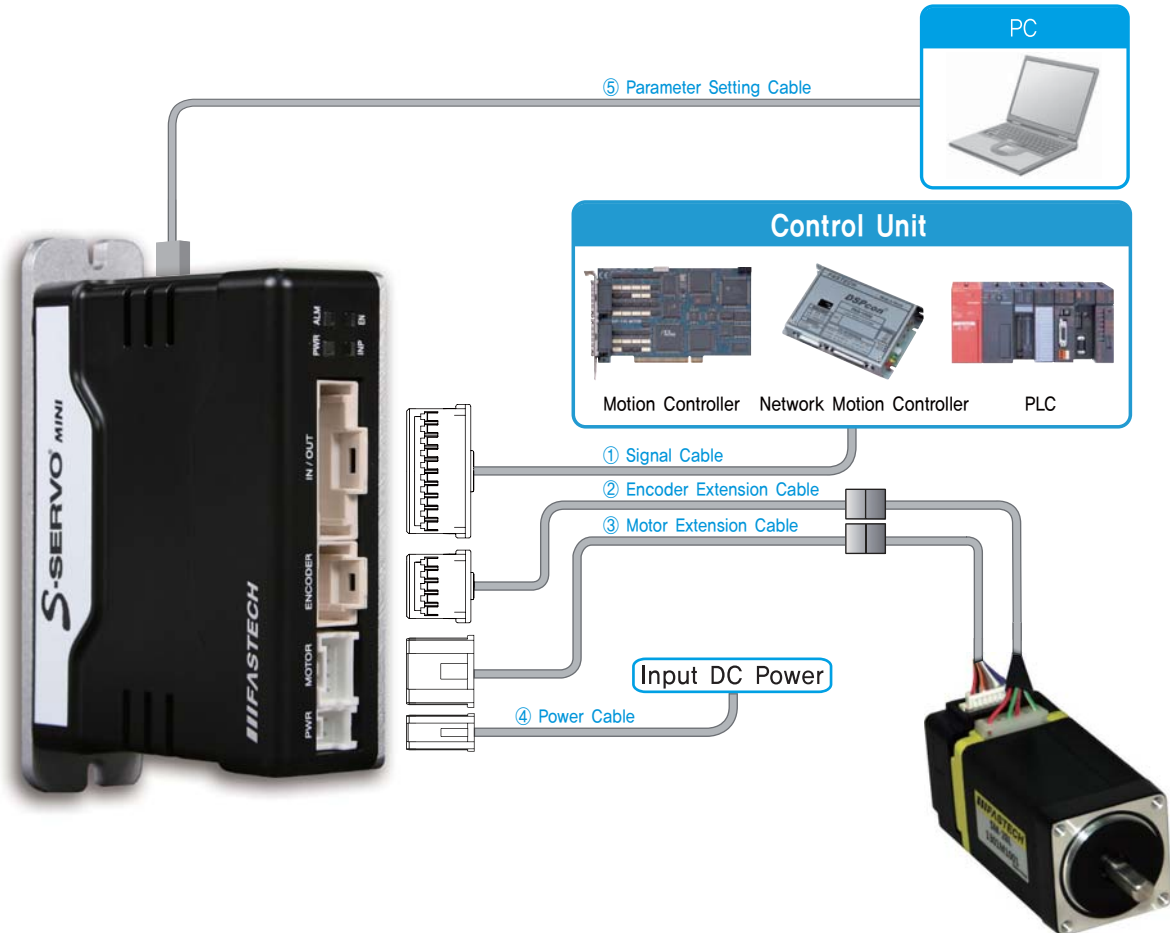

Type	Signal Cable	Encoder Cable	Motor Cable	Power Cable	Parameter Setting Cable
Standard Length	–	30cm	30cm	–	–
Max. Length	20m	20m	20m	2m	2m

Accessories [S-SERVO MINI]

Purpose		ITEM	Standard	Quantity	Manufacturer
I/O Connections(CN1)		Housing	501646-2000	1	MOLEX
		Terminal	501648-1000	23	
Encoder Connection	Drive Side(CN2)	Housing	501646-1000	1	MOLEX
		Terminal	501648-1000	12	
	Encoder Side	Housing	SMP-09V-NC	1	JST
		Terminal	SHF-001T-0.8BS	10	
Motor Connection	Drive Side(CN3)	Housing	PAP-04V-S	1	JST
		Terminal	SPHD-001T-P0.5	5	
	Motor Side	Housing	5557-04R	1	MOLEX
		Terminal	5556T	5	
Power Connection(CN4)		Housing	PAP-02V-S	1	JST
		Terminal	SPHD-001T-P0.5	3	

Cable Option

①Signal Cable

Model Name	Length(m)	Remark
CSSM-S-□□□F CSSM-S-□□□M	□□□ □□□	Normal Cable Robot Cable

□is for Cable Length, The unit is 1m and Max. 20m Length.

Manufacturer : MOLEX
Housing : 501646-1000
Terminal : 501648-1000

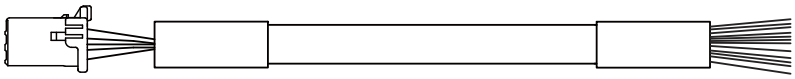

②Encoder Extension Cable

Model Name	Length(m)	Remark
CSVI-E-□□□F CSVI-E-□□□M	□□□ □□□	Normal Cable Robot Cable

□is for Cable Length, The unit is 1m and Max. 20m Length.

Manufacturer : MOLEX
Housing : 501646-1000
Terminal : 501648-1000

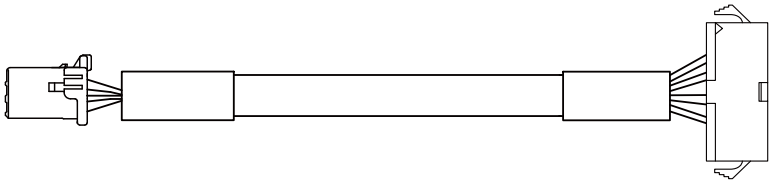

Manufacturer : JST
Housing : SMP-09V-NC
Terminal : SHF-001T-0.8BS

③Motor Extension Cable

Model Name	Length(m)	Remark
CMNB-M-□□□F CMNB-M-□□□M	□□□ □□□	Normal Cable Robot Cable

□is for Cable Length, The unit is 1m and Max. 20m Length.

Manufacturer : JST
Housing : PAP-04V-S
Terminal : SPHD-001T-P0.5

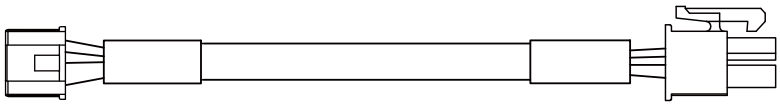

Manufacturer : MOLEX
Housing : 5557-04R
Terminal : 5556T

④Drive Power Cable

Model Name	Length(m)	Remark
CMNB-P-□□□F CMNB-P-□□□M	□□□ □□□	Normal Cable Robot Cable

□is for Cable Length, The unit is 1m and Max. 2m Length.

Manufacturer : JST
Housing : PAP-02V-S
Terminal : SPHD-001T-P0.5

⑤Parameter Setting Cable

Model Name	Length(m)	Remark
CBTS-C-□□□F	□□□	Normal Cable

□is for Cable Length, The unit is 1m and Max. 2m Length.

Manufacturer : MOLEX
Housing : 5264-03
Terminal : 5263

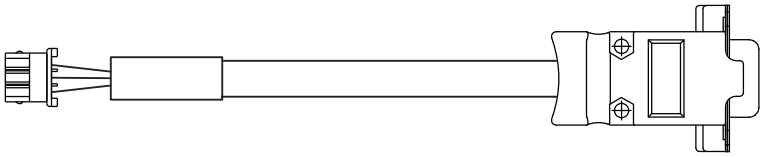

Manufacturer : AMPHENOL
Connector : L177SDE09S
Backshell : 17E-1657-09

External Wiring Diagram

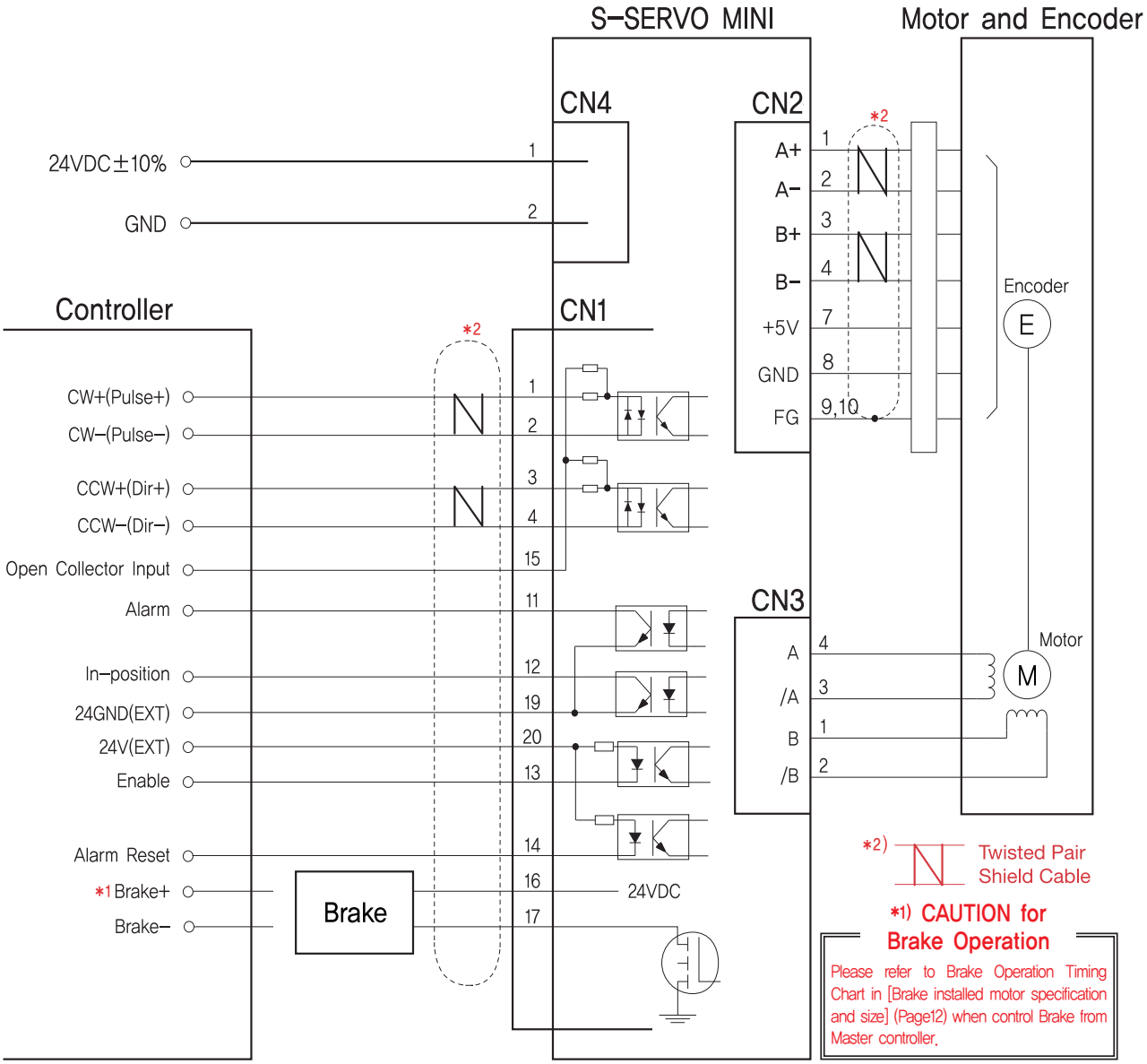

* Turn power off of S-SERVO drive and master controller when connect I/O cable between drive and master controller to avoid any damage.

S-SERVO 2X

Drive Specifications

Specification		S-SERVO-2X
Input Voltage		24VDC ± 10%
Control Method		Closed Loop control by ARM-based 32-bit MCU
Current Consumption		Max 1A (Except motor current)
Operating Condition	Temperature	0~50℃ (Non-condensing)
	Humidity	35~85%RH (Non-condensing)
	Vib. Resist	0.5G
Functions*2	Rotation Speed	0~3,000rpm*1
	Resolution [P/R]*4	500 1,000 1,600 2,000 3,200 3,600 4,000 5,000 6,400 8,000 10,000 20,000 25,000 36,000 40,000 50,000 (Selectable by ROTARY switch) * Default : 4,000
	Maximum Input	500KHz (Duty 50%)
	Protection Functions	Over Current, Over Speed, Position Tracking Error, Over Load, Over Temperature, Over Regenerated Voltage, Motor Connection Error, Encoder Connection Error, Motor Voltage Error, In-Position Error, ROM Error, Position Overflow Error
	LED Display	Power status, In-Position status, Enable status, Alarm status
	RUN Current*5	50%~150% (Setting by using GUI) RUN current is current value which flows onto the motor during operation (rotation) of the motor and it is set based on rated current of the motor. * Default : 100%
	STOP Current	20%~100% (Setting by using GUI) When motor stop operation, 0.1 second after motor current will be set to STOP current value. STOP current value is a percentage of the rated current of motor. * Default : 50%
	Pulse Input Method	1-Pulse/2-Pulse (Selectable by DIP switch) * Default : 2-Pulse
	Rotational Direction	CW/CCW (Selectable by DIP switch) * Default : CW
	Speed/Position Control Command	Pulse input
Input Output Signal*3	Input Signal Functions	Position command pulse, Enable, Alarm reset (Photocoupler input)
	Output Signal Functions	In-Position, Alarm (Photocoupler output)
Dimension (mm)		190(W)×80(D)×40(H)
Weight (Except attachments)		270g

*1 Maximum speed is variable according to resolution. Maximum speed is 3,000rpm until resolution 10,000. Over the 10,000 resolution, maximum rotation speed will be reduced.

*2 Please refer to 「Setting and operating」 (33 Page) to obtain detailed function information

*3 Please refer to 「Control Input/Output explanation」 (45 Page) to obtain detailed Input/Output signal information

*4 Maximum encoder resolution of S-SERVO is 4,000 [P/R].
If set resolution is above 4,000[P/R], it is microstepping operation between encoder pulse.

*5 For more detail information of RUN Current, please refer to the [Parameter Setting GUI] (Catalog page 46).

Drive Size (mm)

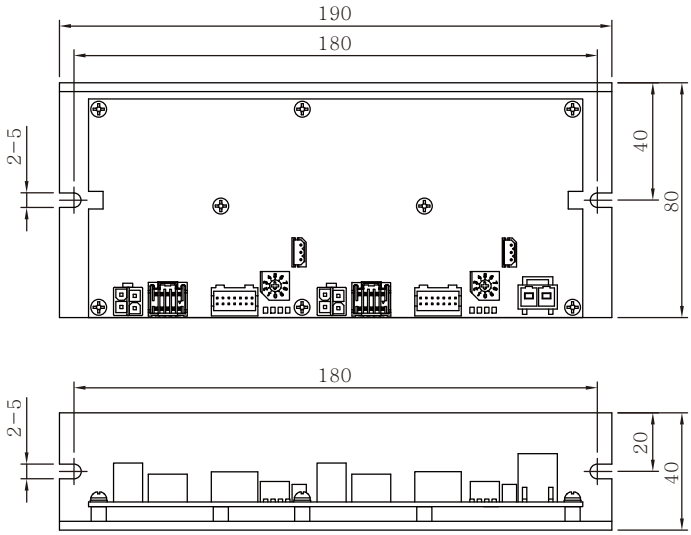

Setting and Operation

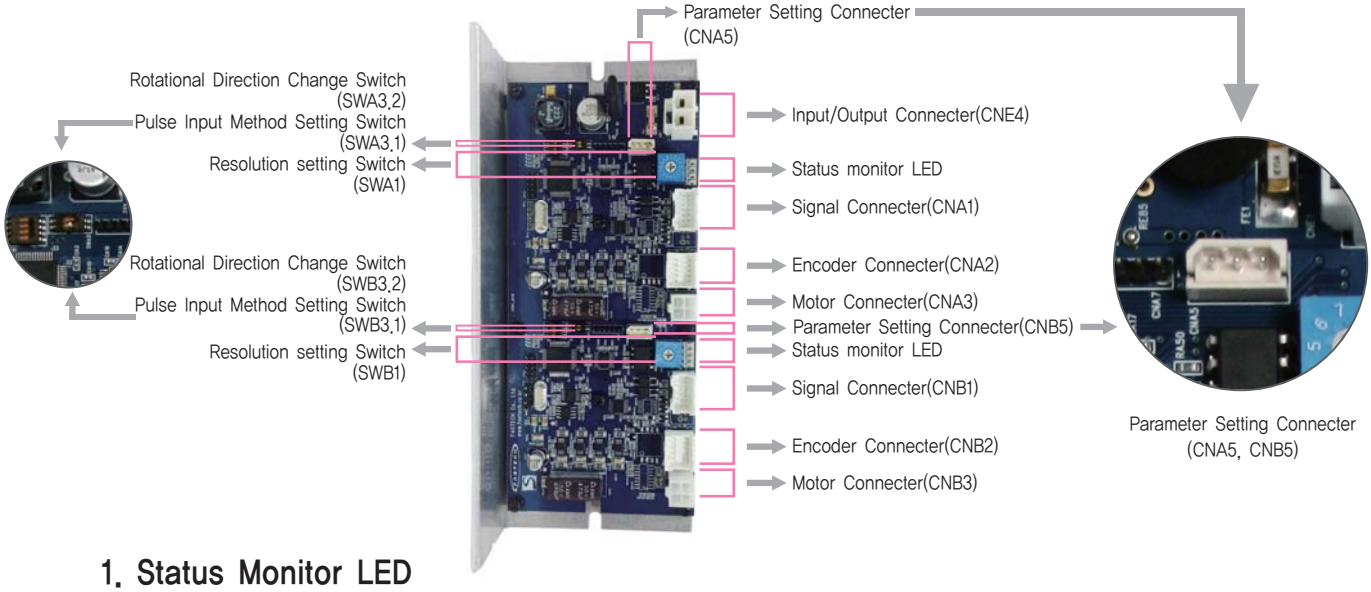

1. Status Monitor LED

Indication	Color	Function	ON/OFF Condition
PWR	Green	Power Input Indication	LED is turned ON when power is applied
INP	Yellow	Complete Positioning Motion	Light on when Position Deviation located within preset value* from target position, after Position Commando Pulse Input is completed
EN	Orange	Motor Enable Status	Enable : Lights On, Disable : Lights Off
ALM	Red	Alarm Indication	Flash when protection function is activated (Identifiable which protection mode is activated by counting the blinking times)

* Default = 0
Can be selected by parameter setting GUI

◆ Protection functions and LED flash times

Times	Protection	Conditions
1	Over Current Error	The current through power devices in inverter exceeds the limit value
2	Over Speed Error	Motor speed exceed 3,000rpm
3	Position Tracking Error	Position error value is higher than 90˚ in motor run state
4	Over Load Error	The motor is continuously operated more than 5 second under a load exceeding the max. torque
5	Over Temperature Error	Inside temperature of drive exceeds 85℃
6	Over Regenerated Voltage Error	Back-EMF more than 48V
7	Motor Connect Error	The power is ON without connection of the motor cable to drive
8	Encoder Connect Error	Cable connection error with Encoder connector in drive
9	Motor Voltage Error	Motor voltage less than 20V
10	In-Position Error	After operation is finished, a position error occurs
12	ROM Error	Error occurs in parameter storage device(ROM)
15	Position Overflow error	Position error value is higher than 90˚ in motor stop state

Alarm LED flash (ex: Position tracking error)

2. Resolution Selection Switch(SWA1, SWB1)

The number of pulse per revolution.

Position	Pulse/Revolution	Position	Pulse/Revolution
0	500	8	6,400
1	1,000	9	8,000
2	1,600	A	10,000
3	2,000	B	20,000
4	3,200	C	25,000
5	3,600	D	36,000
6	*4,000	E	40,000
7	5,000	F	50,000

* Default = 4,000

3. Rotational Direction Selection Switch(SWA3.2, SWB3.2)

Indication	Switch Name	Functions
DIR	Switching Rotational Direction	Based on CW(+Dir signal) input to driver. ON : CCW(−Direction) OFF : CW(+Direction) * Default : CW mode

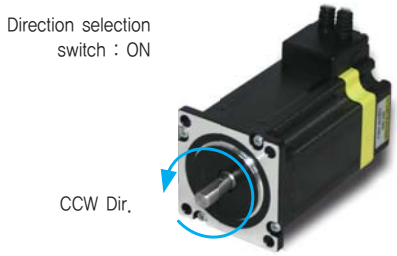

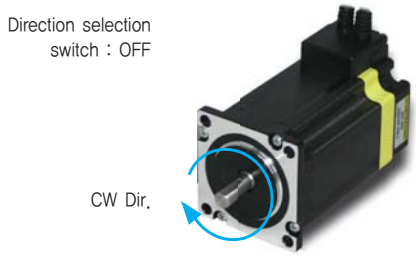

4. Pulse Input Selection Switch(SWA3.1, SWB3.1)

Indication	Switch Name	Functions
2P/1P	Selecting Pulse Input Mode	Selectable 1−Pulse input mode or 2−Pulse input mode as Pulse input signal. ON : 1−Pulse mode OFF : 2−Pulse mode * Default : 2−Pulse mode

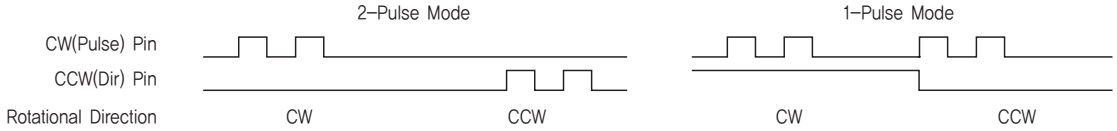

5. Power Connector(CNE4)

NO.	Function
1	24VDC ±10%
2	GND

6. Motor Connector(CNA3,CNB3)

NO.	Function
1	A Phase
2	B Phase
3	/A Phase
4	/B Phase

7. Encoder Connector(CNA2,CNB2)

NO.	Function	I/O
1	A+	Input
2	A−	Input
3	B+	Input
4	B−	Input
5	NC	---
6	NC	---
7	5VDC	Output
8	5GND	Output
9	F. GND	---
10	F. GND	---

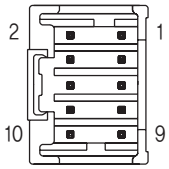

8. Input/Output Signal(CNA1,CNB1)

NO.	Function	I/O
1	Brake−	Output
2	Brake+	Output
3	24GND(EXT)	Input
4	24V(EXT)	Input
5	Alarm Reset	Input
6	Enable	Input
7	Alarm	Output
8	In−Position	Output
9	O.C Input	Input
10	F.GND	---
11	CW−(Pulse−)	Input
12	CW+(Pulse+)	Input
13	CCW−(Dir−)	Input
14	CCW+(Dir+)	Input

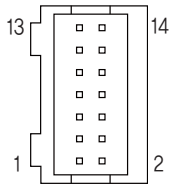

9. Parameter Connector(CNA5,CNB5)

NO.	Function	I/O
1	TX	Output
2	RX	Input
3	GND	---

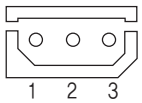

System Configuration

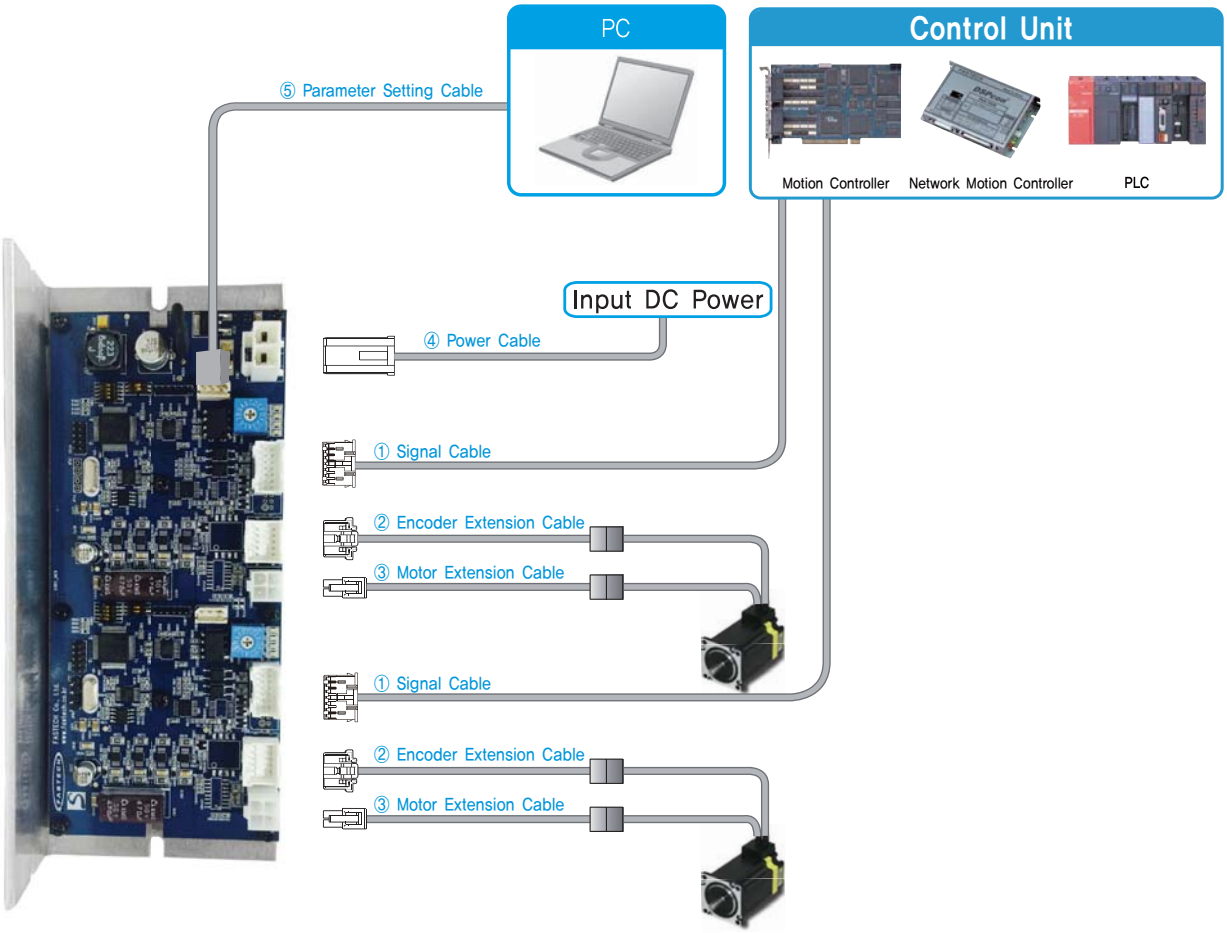

Type	Signal Cable	Encoder Cable	Motor Cable	Power Cable	Parameter Setting Cable
Standard Length	–	30cm	30cm	–	–
Max. Length	20m	20m	20m	2m	2m

Accessories [S-SERVO 2X]

Purpose		ITEM	Standard	Quantity	Manufacturer
I/O Connections (CNA1,CNB1)		Housing	PADP-14V-1-S	2	JST
		Terminal	SPH-002T-P0.5L	28	
Encoder Connection	Drive Side (CNA2,CNB2)	Housing	51353-1000	2	MOLEX
		Terminal	56134-9000	20	
	Encoder Side	Housing	SMP-09V-NC	2	JST
		Terminal	SHF-001T-0.8BS	20	
Motor Connection	Drive Side (CNA3,CNB3)	Housing	5557-04R	2	MOLEX
		Terminal	5556T	8	
	Motor Side	Housing	5557-04R	2	
		Terminal	5556T	8	
Power Connection (CNE4)		Housing	VLP-02V	1	JST
		Terminal	SVF-61T-P2.0	2	

Cable Option

①Signal Cable

Model Name	Length(m)	Remark
CSSO-S-□□□F CSSO-S-□□□M	□□□ □□□	Normal Cable Robot Cable

□is for Cable Length, The unit is 1m and Max. 20m Length.

Manufacturer : JST
Housing : PADP-14V-1-S
Terminal : SPH-002T-P0.5L

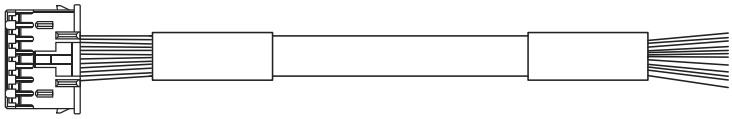

②Encoder Extension Cable

Model Name	Length(m)	Remark
CSVO-E-□□□F CSVO-E-□□□M	□□□ □□□	Normal Cable Robot Cable

□is for Cable Length, The unit is 1m and Max. 20m Length.

Manufacturer : MOLEX
Housing : 51353-1000
Terminal : 56134-9000

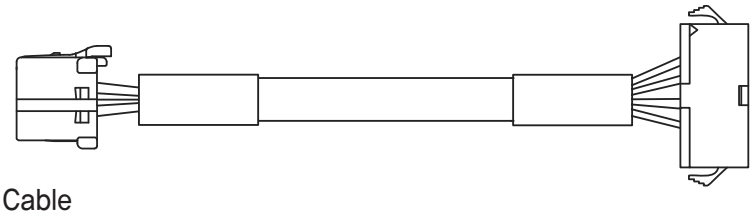

Manufacturer : JST
Housing : SMP-09V-NC
Terminal : SHF-001T-0.8BS

③Motor Extension Cable

Model Name	Length(m)	Remark
CSVO-M-□□□F CSVO-M-□□□M	□□□ □□□	Normal Cable Robot Cable

□is for Cable Length, The unit is 1m and Max. 20m Length.

Manufacturer : MOLEX
Housing : 5557-04R
Terminal : 5556T

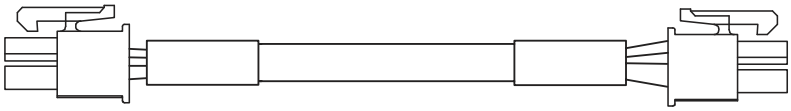

Manufacturer : MOLEX
Housing : 5557-04R
Terminal : 5556T

④Drive Power Cable

Model Name	Length(m)	Remark
CSVX-P-□□□F CSVX-P-□□□M	□□□ □□□	Normal Cable Robot Cable

□is for Cable Length, The unit is 1m and Max. 2m Length.

Manufacturer : JST
Housing : VLP-02V
Terminal : SVF-61T-P2.0

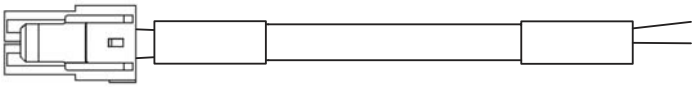

⑤Parameter Setting Cable

Model Name	Length(m)	Remark
CBTS-C-□□□F	□□□	Normal Cable

□is for Cable Length, The unit is 1m and Max. 2m Length.

Manufacturer : MOLEX
Housing : 5264-03
Terminal : 5263

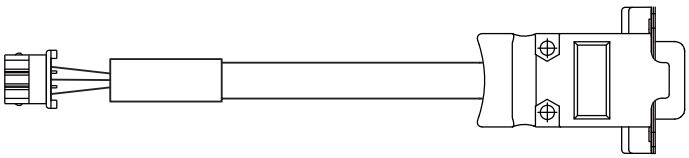

Manufacturer : AMPHENOL
Connector : L177SDE09S
Backshell : 17E-1657-09

External Wiring Diagram

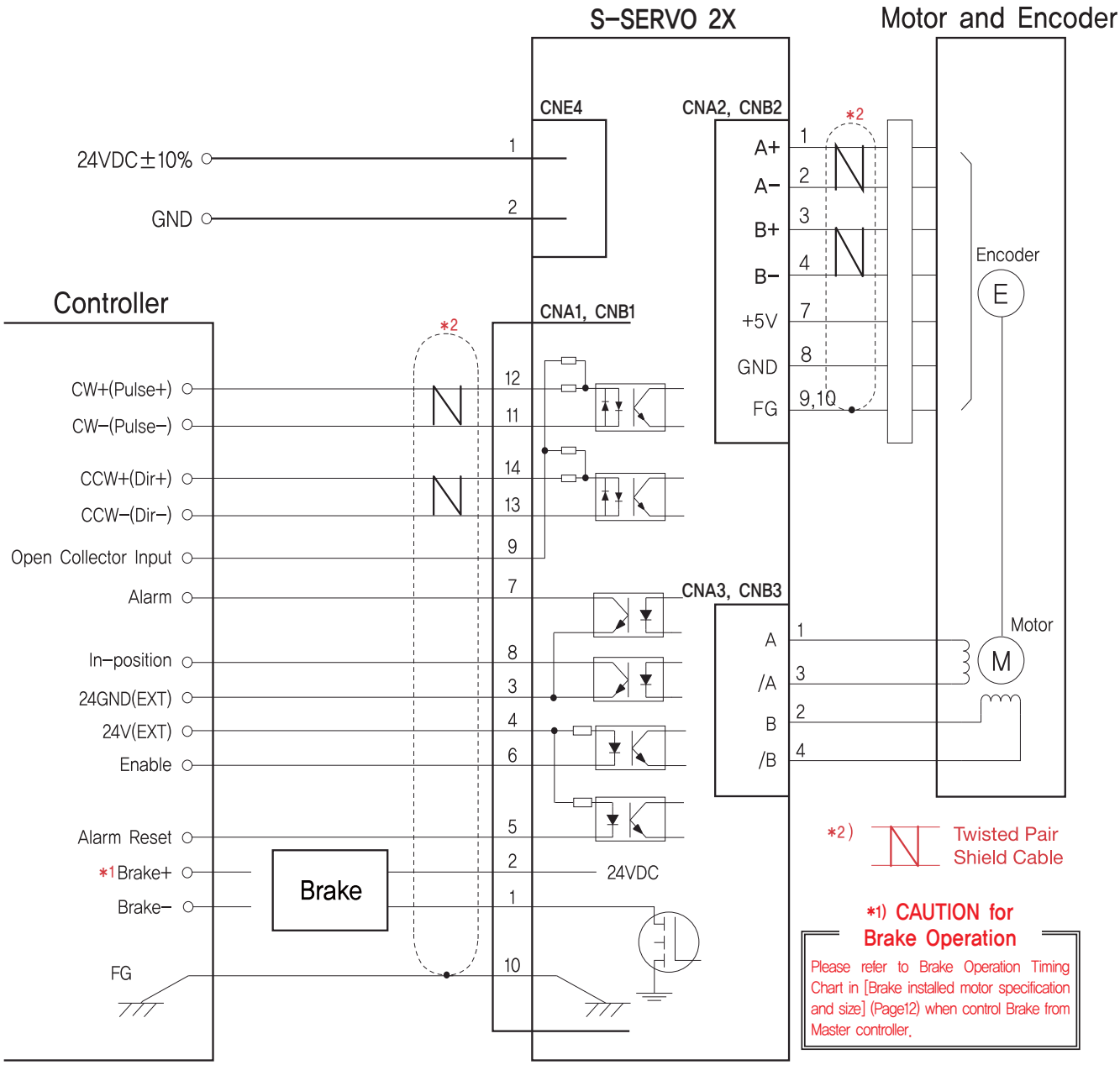

* Except common usage of power for S-SERVO 2X, 3X, external wiring diagram for each drive of motor, encoder and I/Os are all same.
* Turn power off of S-SERVO drive and master controller when connect I/O cable between drive and master controller to avoid any damage.

S-SERVO 3X

Drive Specifications

Specification		S-SERVO-3X
Input Voltage		24VDC ± 10%
Control Method		Closed Loop control by ARM-based 32-bit MCU
Current Consumption		Max 1.5A (Except motor current)
Operating Condition	Temperature	0~50℃ (Non-condensing)
	Humidity	35~85%RH (Non-condensing)
	Vib. Resist	0.5G
Functions*2	Rotation Speed	0~3,000rpm*1
	Resolution [P/R]*4	500 1,000 1,600 2,000 3,200 3,600 4,000 5,000 6,400 8,000 10,000 20,000 25,000 36,000 40,000 50,000 (Selectable by ROTARY switch) * Default : 4,000
	Maximum Input	500KHz (Duty 50%)
	Protection Functions	Over Current, Over Speed, Position Tracking Error, Over Load, Over Temperature, Over Regenerated Voltage, Motor Connection Error, Encoder Connection Error, Motor Voltage Error, In-Position Error, ROM Error, Position Overflow Error
	LED Display	Power status, In-Position status, Enable status, Alarm status
	RUN Current*5	50%~150% (Setting by using GUI) RUN current is current value which flows onto the motor during operation (rotation) of the motor and it is set based on rated current of the motor. * Default : 100%
	STOP Current	20%~100% (Setting by using GUI) When motor stop operation, 0.1 second after motor current will be set to STOP current value. STOP current value is a percentage of the rated current of motor. * Default : 50%
	Pulse Input Method	1-Pulse/2-Pulse (Selectable by DIP switch) * Default : 2-Pulse
	Rotational Direction	CW/CCW (Selectable by DIP switch) * Default : CW
	Speed/Position Control Command	Pulse input
Input Output Signal*3	Input Signal Functions	Position command pulse, Enable, Alarm reset (Photocoupler input)
	Output Signal Functions	In-Position, Alarm (Photocoupler output)
Dimension (mm)		260(W)×80(D)×40(H)
Weight (Except attachments)		410g

*1 Maximum speed is variable according to resolution. Maximum speed is 3,000rpm until resolution 10,000. Over the 10,000 resolution, maximum rotation speed will be reduced.

*2 Please refer to 「Setting and operating」 (39 Page) to obtain detailed function information

*3 Please refer to 「Control Input/Output explanation」 (45 Page) to obtain detailed Input/Output signal information

*4 Maximum encoder resolution of S-SERVO is 4,000 [P/R].
If set resolution is above 4,000[P/R], it is microstepping operation between encoder pulse.

*5 For more detail information of RUN Current, please refer to the [Parameter Setting GUI] (Catalog page 46).

Drive Size (mm)

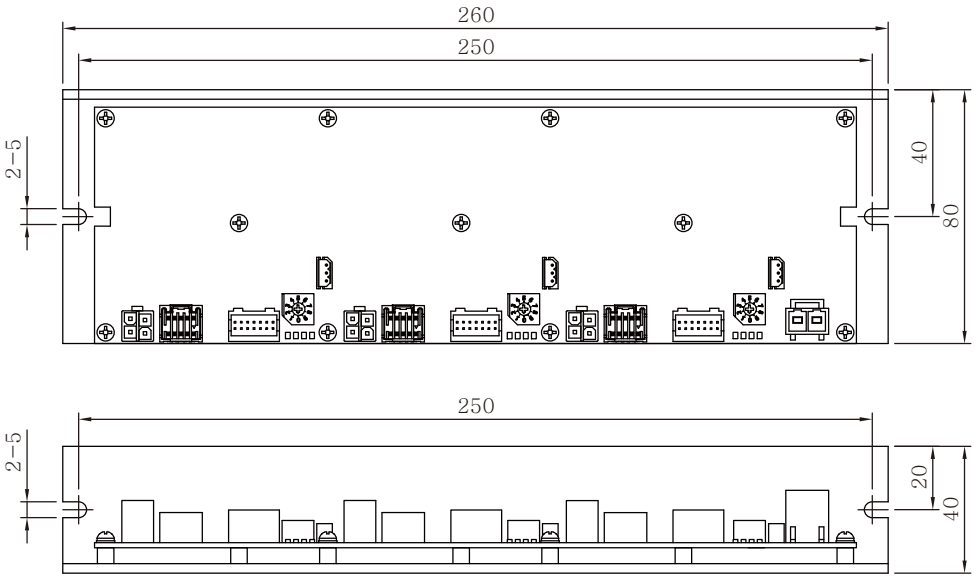

Setting and Operation

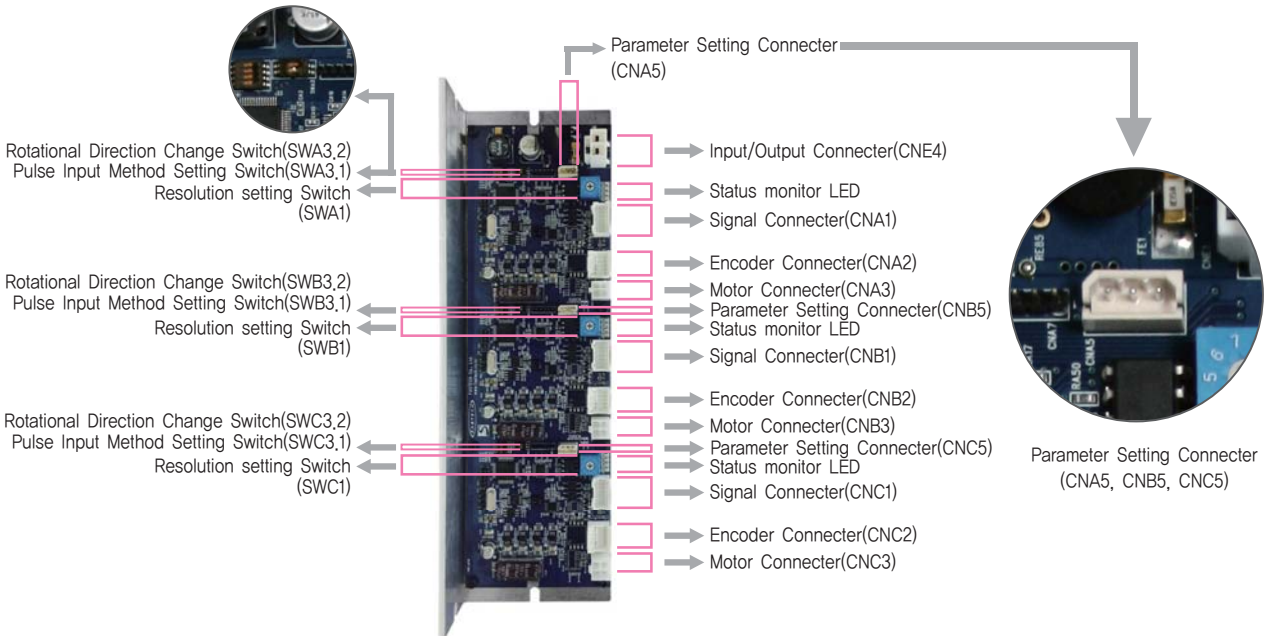

1. Status Monitor LED

Indication	Color	Function	ON/OFF Condition
PWR	Green	Power Input Indication	LED is turned ON when power is applied
INP	Yellow	Complete Positioning Motion	Light on when Position Deviation located within preset value* from target position, after Position Commando Pulse Input is completed
EN	Orange	Motor Enable Status	Enable : Lights On, Disable : Lights Off
ALM	Red	Alarm Indication	Flash when protection function is activated (Identifiable which protection mode is activated by counting the blinking times)

* Default = 0
Can be selected by parameter setting GUI

◆ Protection functions and LED flash times

Times	Protection	Conditions
1	Over Current Error	The current through power devices in inverter exceeds the limit value
2	Over Speed Error	Motor speed exceed 3,000rpm
3	Position Tracking Error	Position error value is higher than 90˚ in motor run state
4	Over Load Error	The motor is continuously operated more than 5 second under a load exceeding the max. torque
5	Over Temperature Error	Inside temperature of drive exceeds 85℃
6	Over Regenerative Voltage Error	Back-EMF more than 48V
7	Motor Connect Error	The power is ON without connection of the motor cable to drive
8	Encoder Connect Error	Cable connection error with Encoder connector in drive
9	Motor Voltage Error	Motor voltage less than 20V
10	In-Position Error	After operation is finished, a position error occurs
12	ROM Error	Error occurs in parameter storage device(ROM)
15	Position Overflow error	Position error value is higher than 90˚ in motor stop state

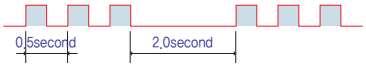

Alarm LED flash (ex: Position tracking error)

2. Resolution Selection Switch(SWA1, SWB1, SWC1)

The number of pulse per revolution.

Position	Pulse/Revolution	Position	Pulse/Revolution
0	500	8	6,400
1	1,000	9	8,000
2	1,600	A	10,000
3	2,000	B	20,000
4	3,200	C	25,000
5	3,600	D	36,000
6	*4,000	E	40,000
7	5,000	F	50,000

* Default = 4,000

3. Rotational Direction Selection Switch(SWA3.2, SWB3.2, SWC3.2)

Indication	Switch Name	Functions
DIR	Switching Rotational Direction	Based on CW(+Dir signal) input to driver. ON : CCW(−Direction) OFF : CW(+Direction) * Default : CW mode

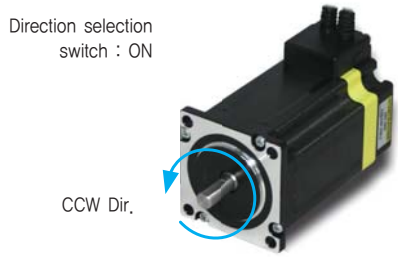

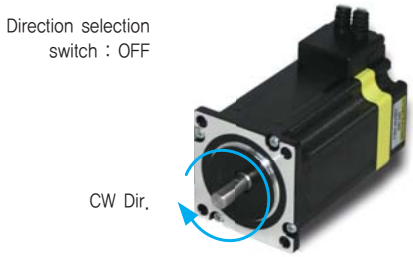

4. Pulse Input Selection Switch(SWA3.1, SWB3.1, SWC3.1)

Indication	Switch Name	Functions
2P/1P	Selecting Pulse Input Mode	Selectable 1−Pulse input mode or 2−Pulse input mode as Pulse input signal. ON : 1−Pulse mode OFF : 2−Pulse mode * Default : 2−Pulse mode

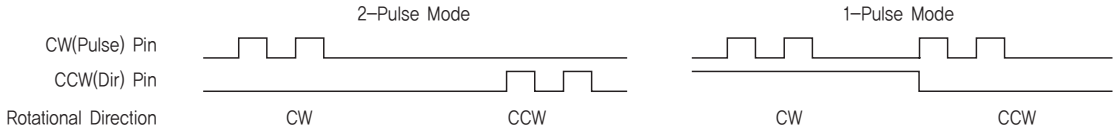

5. Power Connector(CNE4)

NO.	Function
1	24VDC ±10%
2	GND

6. Motor Connector(CNA3,CNB3,CNC3)

NO.	Function
1	A Phase
2	B Phase
3	/A Phase
4	/B Phase

7. Encoder Connector(CNA2,CNB2,CNC2)

NO.	Function	I/O
1	A+	Input
2	A−	Input
3	B+	Input
4	B−	Input
5	NC	---
6	NC	---
7	5VDC	Output
8	5GND	Output
9	F. GND	---
10	F. GND	---

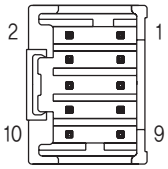

8. Input/Output Signal(CNA1,CNB1)

NO.	Function	I/O
1	Brake−	Output
2	Brake+	Output
3	24GND(EXT)	Input
4	24V(EXT)	Input
5	Alarm Reset	Input
6	Enable	Input
7	Alarm	Output
8	In−Position	Output
9	O.C Input	Input
10	F.GND	---
11	CW−(Pulse−)	Input
12	CW+(Pulse+)	Input
13	CCW−(Dir−)	Input
14	CCW+(Dir+)	Input

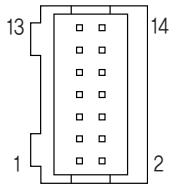

9. Parameter Connector(CNA5,CNB5,CNC5)

NO.	Function	I/O
1	TX	Output
2	RX	Input
3	GND	---

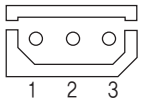

System Configuration

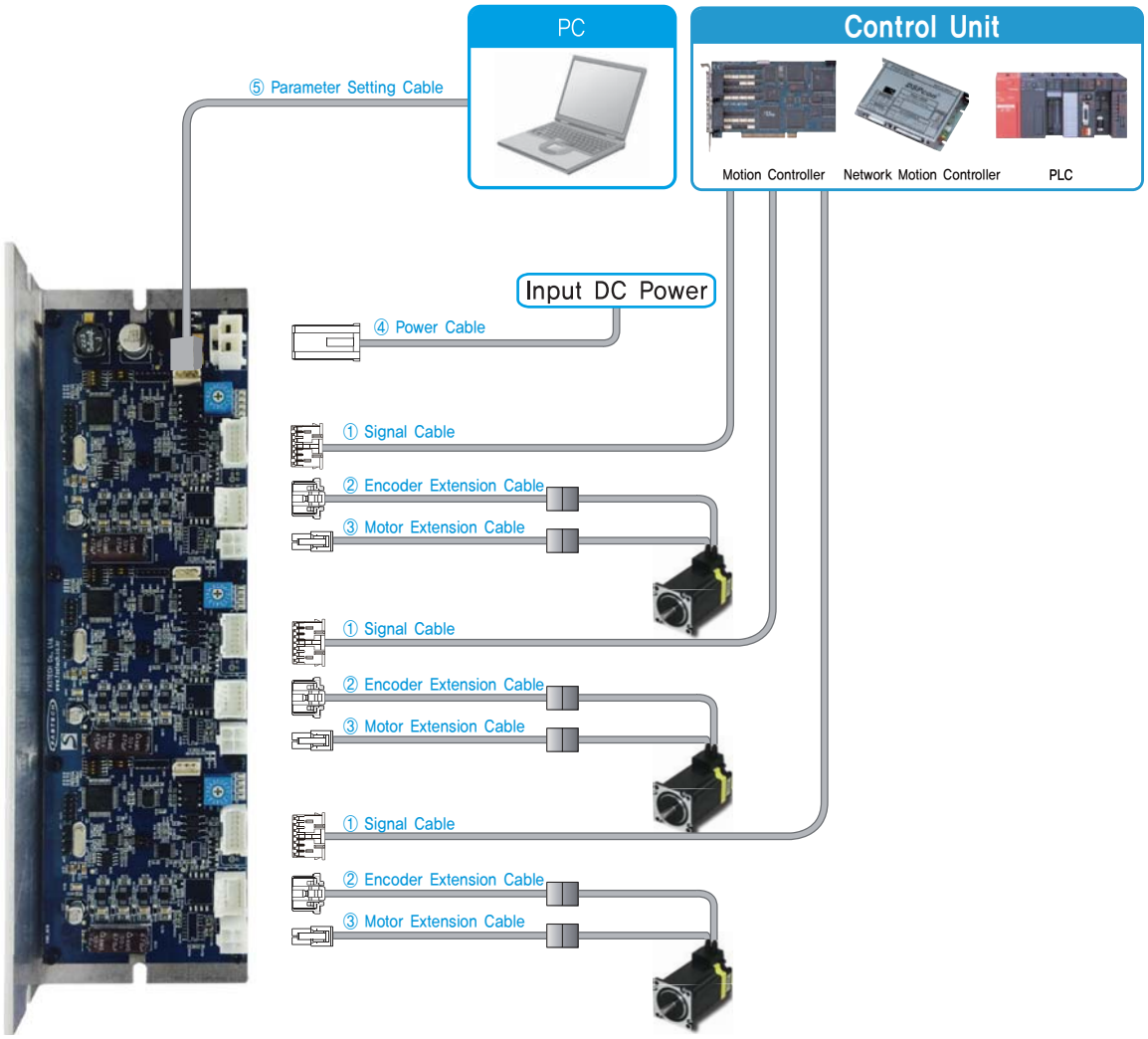

Type	Signal Cable	Encoder Cable	Motor Cable	Power Cable	Parameter Setting Cable
Standard Length	–	30cm	30cm	–	–
Max. Length	20m	20m	20m	2m	2m

Accessories [S-SERVO 3X]

Purpose		ITEM	Standard	Quantity	Manufacturer
I/O Connections (CNA1,CNB1,CNC1)		Housing	PADP-14V-1-S	3	JST
		Terminal	SPH-002T-P0.5L	42	
Encoder Connection	Drive Side (CNA2,CNB2,CNC2)	Housing	51353-1000	3	MOLEX
		Terminal	56134-9000	30	
	Encoder Side	Housing	SMP-09V-NC	3	JST
		Terminal	SHF-001T-0.8BS	30	
Motor Connection	Drive Side (CNA3,CNB3,CNC3)	Housing	5557-04R	3	MOLEX
		Terminal	5556T	12	
	Motor Side	Housing	5557-04R	3	
		Terminal	5556T	12	
Power Connection (CNE4)		Housing	VLP-02V	1	JST
		Terminal	SVF-61TP-2.0	6	

Cable Option

①Signal Cable

Model Name	Length(m)	Remark
CSSO-S-□□□F CSSO-S-□□□M	□□□ □□□	Normal Cable Robot Cable

□is for Cable Length, The unit is 1m and Max. 20m Length.

Manufacturer : JST
Housing : PADP-14V-1-S
Terminal : SPH-002T-P0.5L

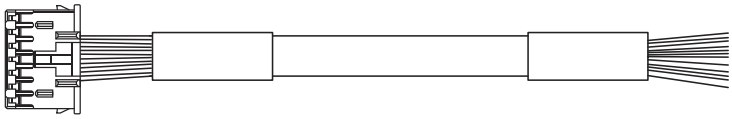

②Encoder Extension Cable

Model Name	Length(m)	Remark
CSVO-E-□□□F CSVO-E-□□□M	□□□ □□□	Normal Cable Robot Cable

□is for Cable Length, The unit is 1m and Max. 20m Length.

Manufacturer : MOLEX
Housing : 51353-1000
Terminal : 56134-9000

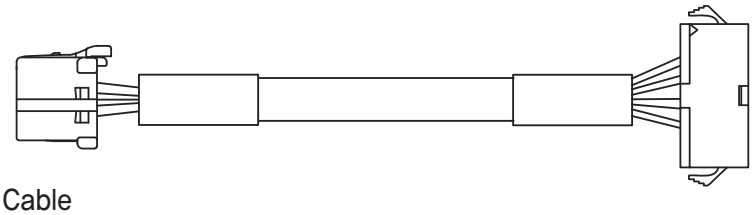

Manufacturer : JST
Housing : SMP-09V-NC
Terminal : SHF-001T-0.8BS

③Motor Extension Cable

Model Name	Length(m)	Remark
CSVO-M-□□□F CSVO-M-□□□M	□□□ □□□	Normal Cable Robot Cable

□is for Cable Length, The unit is 1m and Max. 20m Length.

Manufacturer : MOLEX
Housing : 5557-04R
Terminal : 5556T

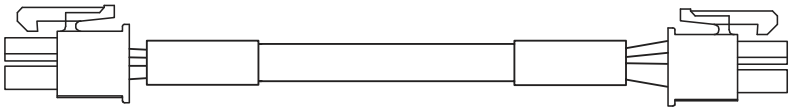

Manufacturer : MOLEX
Housing : 5557-04R
Terminal : 5556T

④Drive Power Cable

Model Name	Length(m)	Remark
CSVX-P-□□□F CSVX-P-□□□M	□□□ □□□	Normal Cable Robot Cable

□is for Cable Length, The unit is 1m and Max. 2m Length.

Manufacturer : JST
Housing : VLP-02V
Terminal : SVF-61T-P2.0

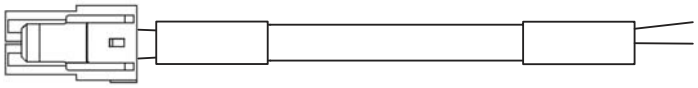

⑤Parameter Setting Cable

Model Name	Length(m)	Remark
CBTS-C-□□□F	□□□	Normal Cable

□is for Cable Length, The unit is 1m and Max. 2m Length.

Manufacturer : MOLEX
Housing : 5264-03
Terminal : 5263

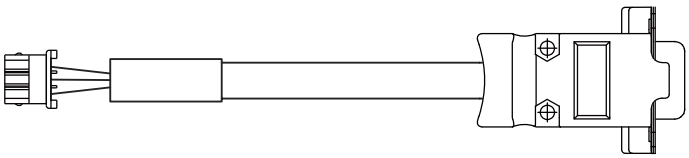

Manufacturer : AMPHENOL
Connector : L177SDE09S
Backshell : 17E-1657-09

External Wiring Diagram

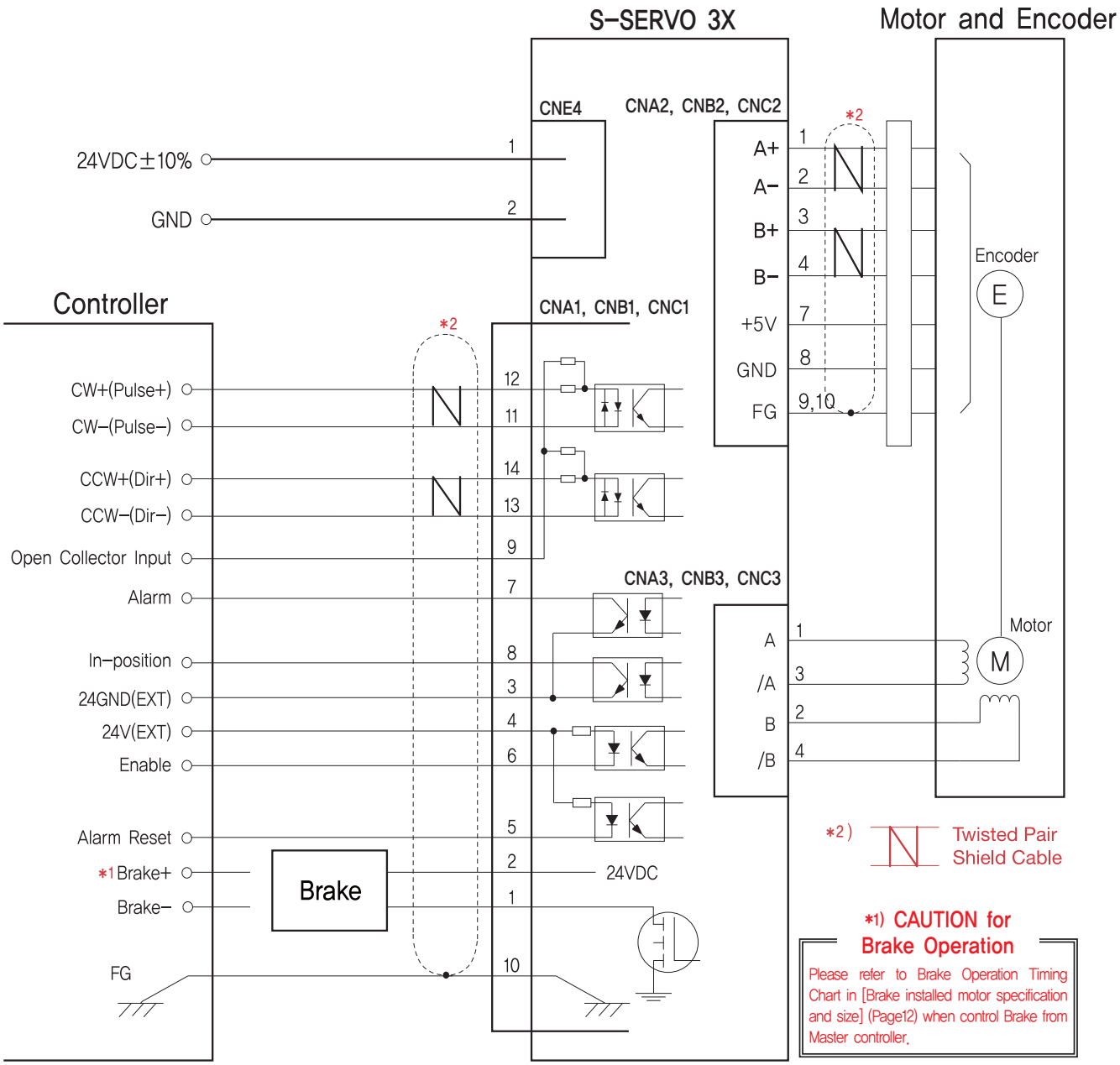

* Except common usage of power for S-SERVO 2X, 3X, external wiring diagram for each drive of motor, encoder and I/Os are all same.
* Turn power off of S-SERVO drive and master controller when connect I/O cable between drive and master controller to avoid any damage.

Control Signal Input/Output Description

1. Input Signal

Input signals of the drive are all photocoupler protected. The signal shows the status of internal photocouplers [ON: conduction], [OFF: Non-conduction], not displaying the voltage levels of the signal.

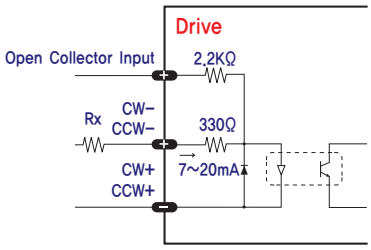

Functions	Pin Number	
	S-SERVO ST	S-SERVO MINI
Open Collector Input	9	15
CW+	12	1
CW-	11	2
CCW+	14	3
CCW-	13	4

* S-SERVO 2X and 3X's pin number is the same as S-SERVO ST.

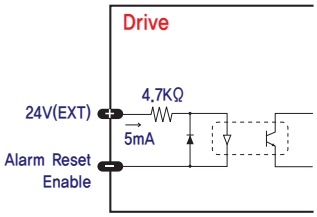

Functions	Pin Number	
	S-SERVO ST	S-SERVO MINI
24V(EXT)	4	20
Alarm Reset	5	14
Enable	6	13

* S-SERVO 2X and 3X's pin number is the same as S-SERVO ST.

◆ CW, CCW Input

This signal can be used to receive a positioning pulse command from a user host motion controller. The user can select 1-pulse input mode or 2-pulse input mode (refer to switch No.1, SW1).
The input schematic of CW, CCW is designed for 5V TTL level. When using 5V level as an input signal, the resistor Rx is not used and connect to the driver directly. When the level of input signal is more than 5V, Rx resistor is required. If the resistor is absent, the drive will be damaged! If the input signal level is 12V, Rx value is 680ohm and 24V, Please use Open Collector Input.

◆ Enable Input

This input can be used only to adjust the position by manually moving the motor shaft from the load-side. By setting the signal [ON], the driver cuts off the power supply to the motor. Then, one can manually adjust output position. When setting the signal back to [OFF], the driver resumes the power to the motor and recovers the holding torque. When driving a motor, one needs to set the signal [OFF].

◆ Alarm Reset Input

When a protection mode has been activated, a signal to this alarm reset input cancels the Alarm output.

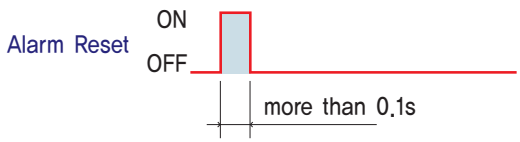

* By setting the alarm reset input signal [ON], cancel the Alarm output. Before cancel the Alarm output, have to remove the source of alarm.

2. Output Signals

Output signals from the driver are photocoupler protected: Alarm, In-Position. The signal indicates the status of internal photocouplers [ON: conduction], [OFF: Non-conduction], not displaying the voltage levels of the signal.

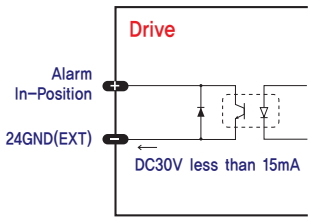

Functions	Pin Number	
	S-SERVO ST	S-SERVO MINI
Alarm	7	11
In-Position	8	12
24GND(EXT)	3	19

* S-SERVO 2X and 3X's pin number is the same as S-SERVO ST.

◆ In-Position Output

In-Position signal is [ON] when positioning is completed. This signal is [ON] when the motor position error is within the value set by the switch SW4.

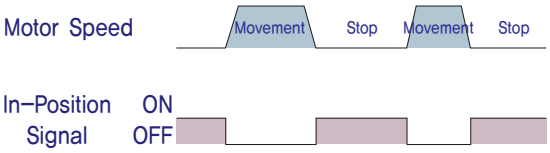

◆ Alarm Output

The Alarm output indicates [ON] when the driver is in abnormal operation. If a protection mode has been activated, it goes [OFF]. A host controller needs to detect this signal and stop sending a motor driving command. When the driver detects an abnormal operation such as overload or over current of the motor, it sets the Alarm output to [OFF], flashes the Alarm LED, disconnect the power to a motor and stops the motor simultaneously.

[Caution] Only at the Alarm output port, the photocoupler isolation is in reverse. When the driver is in normal operation the Alarm output is [ON]. On the contrary when the driver is in abnormal operation that start protection mode, the Alarm output is [OFF].

Common

Parameter Setting GUI [User Interface]

S-SERVO driver utilizes various parameters for operation.
Some parameters need to be adjusted once users feel inconvenience to use or in order to maximize efficiency.
S-SERVO provides parameter modification program for convenience of product usage for users.

The screen shot as below is computer program (GUI) which used for operation process. Users can change and set the parameters of drive for Enable Level, Alarm Reset Level, In-Position Level, Alarm Output Level. Users can use S-SERVO according to its own system.

Please connect parameter setting GUI when S-SERVO is Disable state.
For safety reason, S-SERVO can not be connected to setting GUI when it is Enable state.

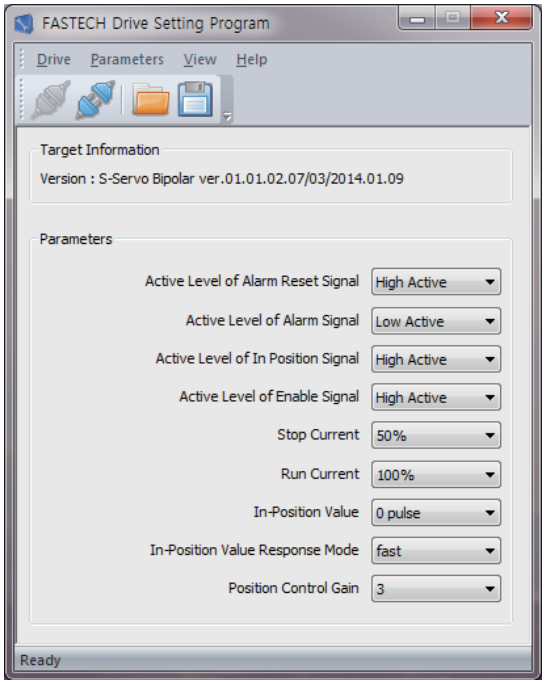

* Parameter setting program (GUI) can be downloaded from website (www.fastech.co.kr).
* Parameter setting program (GUI) support Windows XP, VISTA, 7, 8 (32, 64bit).
* Parameter setting program (GUI) can be updated without warning to increase performance and convenience of user.

The content below is a description of the function for the parameter. Please refer to the attached sheet when set the parameters. The input and output terminal of drive are all photocoupler. The signal shows the status of internal photocouplers [ON: conduction], [OFF: Non-conduction], not displaying the voltage levels of the signal.

Parameters	The Initial Value	Range	Function
Active Level of Alarm Reset Signal	High	Low, High	Set the level of input signal of Alarm Reset. When set it to High and input of Alarm Reset is [ON], the Alarm output will be offed.
Active Level of Alarm Signal	Low	Low, High	Set the level of output signal of Alarm Reset. When set it to Low, the Alarm output is [ON] when normal state, and the Alarm output is [OFF] when protection function is operated.
Active Level of In Position Signal	High	Low, High	Set the level of output signal of In-Position. When set it to High, In-Position output after completion of motor movement, output become [ON]
Active Level of Enable Signal	High	Low, High	Set the level of input signal of Enable input. When set it to High, if Enable input is [ON], drive will stop to power supply to the motor.
Stop Current	50%	20%~100%	Stop Current means motor current which is set automatically after 0.1 seconds of motor is stopped. This parameter is used for reduce the temperature when the motor is stopped for a long time. The motor temperature can rises If set the Stop Current more than 60%.
Run Current	100%	50%~150%	Run Current is value of the current through the motor, while motor is operating (rotat-ing), and it is set based on Rated Current of the motor. Run Current value is related to torque while motor is operating (rotating). If Run Current value is high, torque value also become higher while motor is operat-ing (rotating). Therefore, if it is determined as lack of torque while motor is operating (rotating), torque value while motor is operating (rotating) can be raised by increasing the value of Run Current Parameter. Warning) 1) If Run Current value is high, also the motor temperature can be increased, so please be aware. 2) The maximum setting value (150%) of Run Current is limited to the 4A. Therefore, if rated current value of motor exceeds 2.7A (55mm, 60mm), Run Current value cannot be increased by raise the Run Current value. 3) In case of S-SERVO, Run Current is automatically adjusted according to the load. Therefore, please raise the Run Current only in case of lack of operating torque.
In-Position Value	0pulse	0~63pulse	It shows output conditions of positioning complete signal. In-Position output signal is generated when the pulse number of positional error is lower than selected In-position value set by this switch after positioning command is executed.
In-Position Value Response Mode	Fast	Fast, Accurate	It shows output conditions of positioning complete signal. 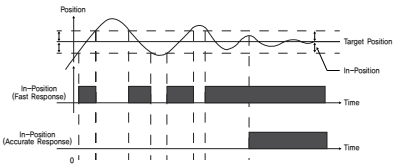
Position Control Gain	3	0~63	When the motor is stopping, it is used to adjust the response of motor according to load mounted on the motor. This value is not the actual value that used inside of drive, it is relative value. For example, if the value is changed from 3 to 6, it does not mean response time will be doubled. If value of this parameter is small, the motion of stopping of motor is become sensitive, and takes less time to stop. If value of this parameter is large, the motion of stopping of motor is become insensitive, and takes more time to stop. In the normal conditions, use the factory default value. Especially, if the load of inertia moment is greater than the motor so motor cannot stop normally, normal operation is possible by increasing the value of this parameter.

FASTECH

Fast, Accurate, Smooth Motion

FASTECH Co., Ltd.

Rm #1202, Bucheon Technopark 401 Dong, Yakdea-dong,
Wonmi-Gu, Bucheon-si, Gyeonggi-do, Rep. Of Korea (Zip)420-734
TEL : 82-32-234-6300,6301 FAX : 82-32-234-6302
E-mail : fastech@fastech.co.kr Homepage : www.fastech.co.kr

Registered
ISO 9001:2008 / ISO 14001:2004

©Copyright 2013 FASTECH Co., Ltd.
All Rights Reserved. Jan 27, 2016 Rev.3